Hornet® HP

Recessed Multiples

amerlux

PROJECT:	TYPE:

Features

Hornet High Power (HP) Multiples perform beautifully, punching through higher ambient light with strong output making them perfect for retail applications. For a clean ceiling aesthetic or when track is not an option, Hornet HP Multiples are ideal for delivering great performance, energy efficiency, and maximum control over where and how you want to place light.

HORNET-HP-R

Product Overview

Type:	Recessed Multiple, Accent & Display
Wattage:	11W, 16W, 18W
Color Temp:	2200K, 2700K, 3000K, 3500K, 4000K
CRI:	83 typ. *(2700K, 3000K, 3500K, 4000K)* 90+ typ. *(2200K, 2700K, 3000K, 3500K, 4000K)* CrispWhite & 3K Class A LEDs available *(16W max)*
Dimming:	TRIAC & ELV, 5% Dim, 120/277VAC Lutron LDE1 Hi-lume® 1% Dim Soft-On/Fade-to-Black, 120/277VAC 0-10V, 1% Dim, 120/277VAC DALI, 1% Dim, 120/277VAC

HORNET-HP-R
(trimless)

Certifications

C US

5 year limited warranty
AMERLUX LED

Fixture Summary

Fixture Type

# of Heads	New Construction	Remodeler	Trim	Trimless
1	Yes	No	Yes	Yes
2	Yes	No	Yes	Yes
3	Yes	No	Yes	Yes
4	Yes	No	Yes	Yes

See separate spec sheet for Semi-Recessed or Remodeler versions.

Performance Data

Watts	Delivered Lumens	LPW	CBCP	Color Temp-CRI
11	1030	93.7	8,243	3000K-83
16	1451	90.7	11,610	3000K-83
18	1640	91.1	13,119	3000K-83

Data is based on 3000K-83 , 120V IES files available on website.
Data is "per head" and based on Spot optic.
See page 10 for other beam spreads.

Hornet® HP

Recessed Multiples

amerlux

PROJECT:	TYPE:

Ordering Information - Frame

HORNET-HP-R/SR-NC-FRAME _____.____.____._____._____._____

1 2 3 4 5 6

1	Model
	HORNET-HP-R/SR-NC-FRAME *(new construction)*

2	Style
	T trimmed
	TL trimless

3	# of Heads
	1
	2
	3
	4

4	Voltage
	120
	277

5	**Driver** *(for non-dimming select LE/TE otpion)*
	LE/TE TRIAC/ELV dimming, 5% dim
	HILUME-H-ECO Lutron LDE1 Hi-lume® 1% dim Soft-On/Fade-to-Black
	0-10V 0-10V dimming, 1% dim
	DALI EldoLED, 1% dim

6	**Options/Accessories**
	EM* emergency battery pack, available on 2, 3 or 4 light - powers only 1 head of the total fixure
	**** If this option is selected, you must also select EM option in the Trim Ordering section.***
	HB49 - hanger bars from min 29" to max 49"
	Note: 14 ½" - 25" hanger bars are included as standard.
	*Choose **HB49** option above for larger mounting spaces only.*

Ordering Information - Trim

HORNET-HP-R-NC-TRIM _____.____.____.____.____.120-277._____.____._____._____

1 2 3 4 5 6 7 8 9 10

1	Model
	HORNET-HP-R-NC-TRIM *(new construction)*

2	Style
	T trimmed
	TL trimless

3	# of Heads
	1
	2
	3
	4

4	Wattage
	11
	16
	18

5	**Finish** *(for housing, head & trim)*
	WT white texture
	BT black texture
	ST silver texture
	Other finishes, consult factory

6	Voltage
	120-277

7	Beam Spread				
	1LT	2LT	3LT	4LT	
	SP	**SP**	**SP**	**SP**	*(spot 15°)*
	NF	**NF**	**NF**	**NF**	*(narrow flood 22°)*
	MFL	**MFL**	**MFL**	**MFL**	*(medium flood 25°)*
	FL	**FL**	**FL**	**FL**	*(flood 28°)*
	WF	**WF**	**WF**	**WF**	*(wide flood 40°)*
	VWF	**VWF**	**VWF**	**VWF**	*(very wide flood 60°)*
	LS	**LS**	**LS**	**LS**	*(linear spread 60°x10°)*

8	Color Temp		
	83 CRI	90+ CRI	
	27 2700K-83	**229**† 2200K-90+	**CRISP**† CrispWhite
	30 3000K-83	**279** 2700K-90+	**3CLA**† 3000K Class A
	35 3500K-83	**309** 3000K-90+	
	40 4000K-83	**359** 3500K-90+	
		409 4000K-90+	
	† Not available for 18W.		

9	**Driver** *(for non-dimming select LE/TE otpion)*
	LE/TE TRIAC/ELV dimming, 5% dim
	HILUME-H-ECO Lutron LDE1 Hi-lume® 1% dim Soft-On/Fade-to-Black
	0-10V 0-10V dimming; 1% dim
	DALI EldoLED; 1% dim

10	**Options**
	SNAH snoot accessory holder, 1" length, matte black interior, exterior finish matches fixture finish, accepts cross blade plus 2 additional forms of media
	AH accessory holder, finish matches fixture finish, accepts 2 forms of media
	HEX hexcell louver, 1/8"x1/8" *(requires SNAH or AH)*
	SOL solite beam softening lens *(requires SNAH or AH)*
	CB cross blade, matte black finish *(requires SNAH)*
	EM* emergency battery pack, available on 2, 3 or 4 light - powers only 1 head of the total fixure
	**** If this option is selected, you must also select EM option in the Frame Ordering section.***

Hornet® HP

Recessed Multiples

PROJECT:	TYPE:

Specifications

Application

Retail, commercial and hospitality accent and display lighting

Construction

Stamped steel mounting frame with integral mounting bars
Thermally protected *(adds 2W to total fixture wattage)*
Steel driver housing
Steel upper housing and laser cut trim ring
Steel plaster frame *(trimless only)*
Complete die-cast optical head construction
No exposed wiring

Optical

Tilt: 0-35°x35° *(Trimmed)*, 0-20°x40° *(Trimless)*
Rotation: 360°+
Beam Spreads: Spot, 15°; Narrow Flood, 22°; Medium Flood, 25°; Flood, 28°; Wide Flood, 40°; Very Wide Flood, 60°; Linear Spread, 60° x 10°

LED

Color Temp Options: 2200K, 2700K, 3000K, 3500K, 4000K, CRISP, Class A
CRI: 83 typ. *(2700K, 3000K, 3500K, 4000K)*
90+ typ. *(2200K, 2700K, 3000K, 3500K, 4000K)*
CrispWhite* LED *(16W max)*
Class A** 3000K LED *(high CRI, high gamut, 16W max)*
R9 Values: 11 *(83 CRI)*, 55 *(90+ CRI)*
Binning: 3-step MacAdam ellipse *(SDCM)*
Life: 50,000+ hrs, > 70% of initial lumens at 50,000 hrs

** **CrispWhite:** CrispWhite Technology delivers the warmth of colors expected from a high 90 CRI solution but also creates the natural crisp white color that is pleasing to the eye. It creates the most impactful lighting ever available, by revealing the richest whites and vibrant colors that pop.*

*** **Class A LED:** Class A LED's have a CRI > 80 and a GAI > 80. CRI defines color "Naturalness" and GAI defines color "Saturation." Both being high delivers rich colors and pure whites.*

Electrical

Wattage: 11W, 16W, 18W
Electronic constant current LED driver, 120/277VAC input
This product complies with IEEE C62.41 for surge endurance up to 2.5KV. Amerlux® recommends using additional surge protection with this unit (supplied by others), surge and over voltage damage is not covered under warranty.

Drivers

LE/TE - Leading Edge *(Triac, Forward Phase)* or Trailing Edge *(ELV, Reverse Phase)* autosensing driver dims down to 5% on most dimming systems.
0-10V, Lutron and DALI systems also available
See pages 11-13 for more dimming information

Finish

Powder coat paint
Consult Factory for custom finishes

Mounting

Hanger Bars:
Adjustable hanger bars included *(14 ½" - 25" std.)*
Optional **HB49** - hanger bars from min 29" to max 49" available
Trimmed:
For use in T-Grid or GB ceilings; max ceiling thickness 1"
Trimless:
For use in GB ceilings; max ceiling thickness 5/8"
Consult Factory for thicker ceilings

Certifications

CSA listed to UL standards. Suitable for damp locations
Indoor use only

Warranty

5 year limited warranty

Emergency Battery Pack *(EM)*

Powers single head of 2, 3 or 4 light multiple at 5.1 watts *(approx. 400 Lm)* for 90 minutes. Not available on 1 light multiple.

Hornet® HP

Recessed Multiples

PROJECT:	TYPE:

Electrical Data

NOTE: System Watts includes an additional 2W for thermal protector power consumption.

1 Light

	1 x 11W		1 x 16W		1 x 18W	
Voltage	**System Watts**	**Amps**	**SystemWatts**	**Amps**	**System Watts**	**Amps**
120V	11	0.09	16	0.13	18	0.15
277V	11	0.04	16	0.06	18	0.07

Electronic constant current LED driver.

2 Light

	2 x 11W		2 x 16W		2 x 18W	
Voltage	**System Watts**	**Amps**	**SystemWatts**	**Amps**	**System Watts**	**Amps**
120V	22	0.18	32	0.27	36	0.30
277V	22	0.08	32	0.12	36	0.13

Electronic constant current LED driver.

3 Light

	3 x 11W		3 x 16W		3 x 18W	
Voltage	**System Watts**	**Amps**	**SystemWatts**	**Amps**	**System Watts**	**Amps**
120V	33	0.28	48	0.40	54	0.45
277V	33	0.12	48	0.17	54	0.19

Electronic constant current LED driver.

4 Light

	4 x 11W		4 x 16W		4 x 18W	
Voltage	**System Watts**	**Amps**	**SystemWatts**	**Amps**	**System Watts**	**Amps**
120V	44	0.37	64	0.53	72	0.60
277V	44	0.16	64	0.23	72	0.26

Electronic constant current LED driver.

Accessories *(diagrams show installation order)*

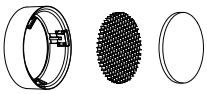

Accessory holder, hexcell louver, solite lens

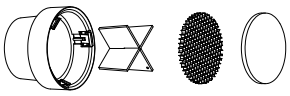

Snoot accessory holder, cross blade, hexcell louver, solite lens

Plaster Frame Installation Detail *(for trimless fixture only)*

1. Recessed extruded housing
2. Aperture plate
3. Ceiling ⅝"
4. Drywall screw *(by others)*
5. Plaster frame
6. Plaster skim coat *(by others)*

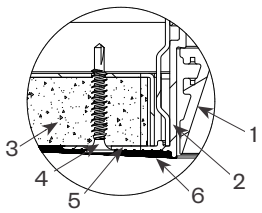

Hornet® HP

Recessed Multiples

amerlux

PROJECT:	TYPE:

Product Details - Recessed Trimmed with ELV/TRIAC Driver

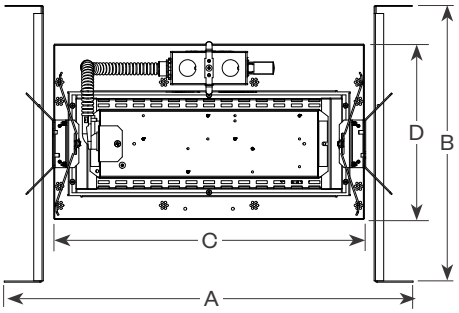

	1 Light	2 Light	3 Light	4 Light
A	12 1/8"	17"	21 1/2"	26"
B	14 1/2" max 25"	14 1/2" max 25"	14 1/2" max 25"	14 1/2" max 25"
C	7 1/16"	11 13/16"	16 5/16"	20 13/16"
D	9 1/8"	9 1/8"	9 1/8"	9 1/8"

Ceiling Cut Out: 1 Light - 5 9/16" x 5 9/16"
2 Light - 5 9/16" x 10 5/16"
3 Light - 5 9/16" x 14 13/16"
4 Light - 5 9/16" x 19 5/16"

End View

Standard Driver *(ELV/TRIAC)*

1 Light

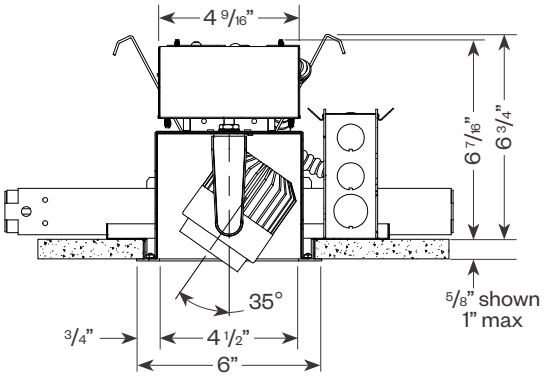

2-4 Light

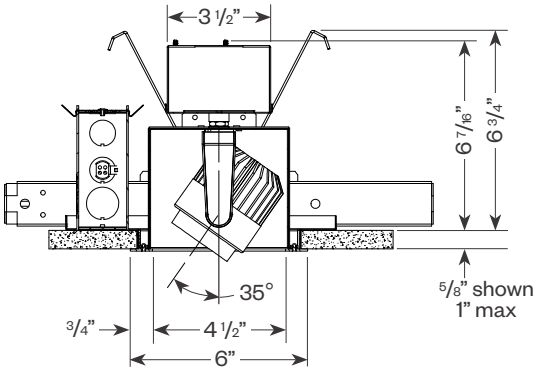

Side View

Standard Driver *(ELV/TRIAC)*

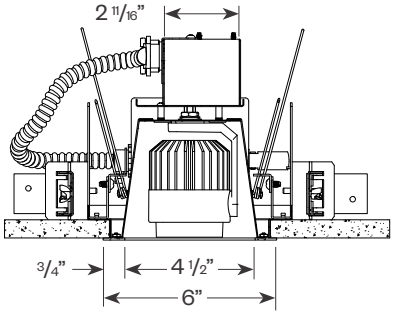

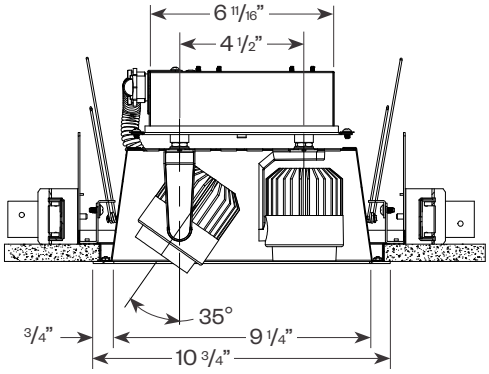

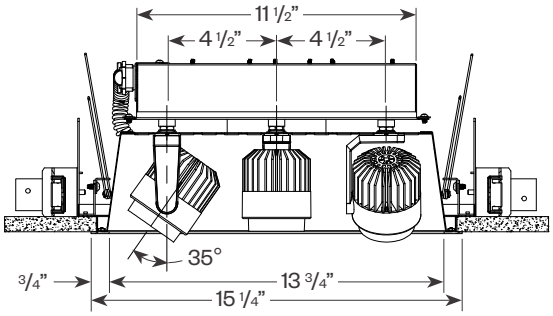

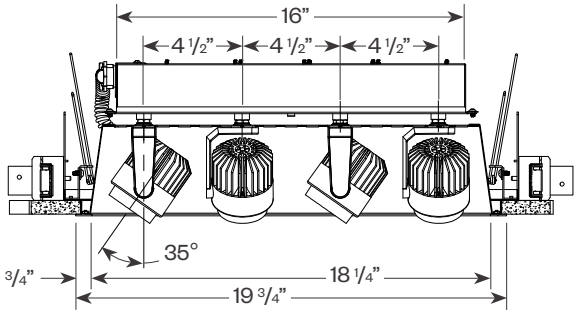

Hornet® HP

Recessed Multiples

amerlux

PROJECT:	TYPE:

Product Details - Recessed Trimmed with Hi-lume®/0-10V/DALI Driver

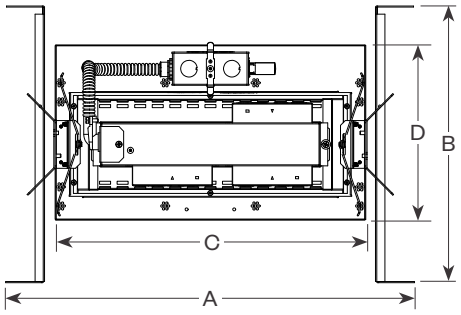

	1 Light	2 Light	3 Light	4 Light
A	12 1/8"	17"	21 1/2"	26"
B	14 1/2" max 25"	14 1/2" max 25"	14 1/2" max 25"	14 1/2" max 25"
C	7 1/16"	11 13/16"	16 5/16"	20 13/16"
D	9 1/8"	9 1/8"	9 1/8"	9 1/8"

Ceiling Cut Out: 1 Light - 5 9/16" x 5 9/16"
2 Light - 5 9/16" x 10 5/16"
3 Light - 5 9/16" x 14 13/16"
4 Light - 5 9/16" x 19 5/16"

End View

Hi-lume®/0-10V/DALI Driver

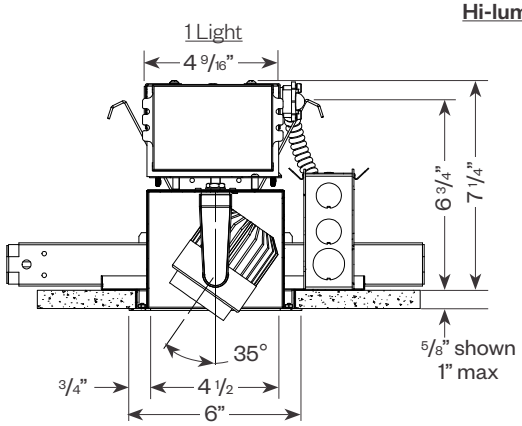

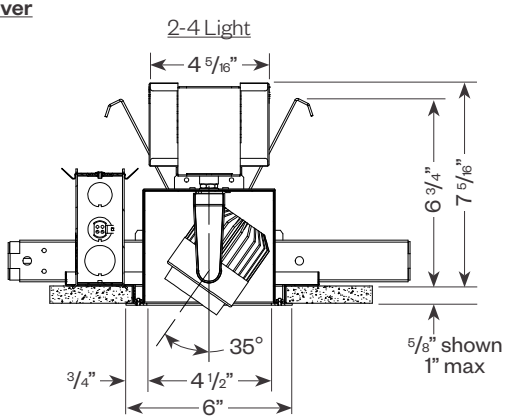

Side View

Hi-lume®/0-10V/DALI Driver

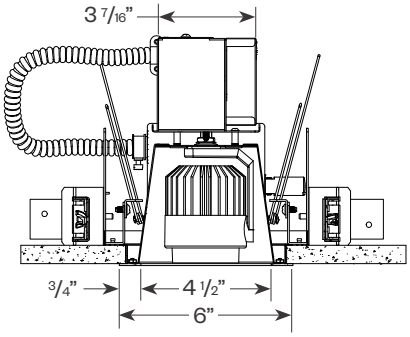

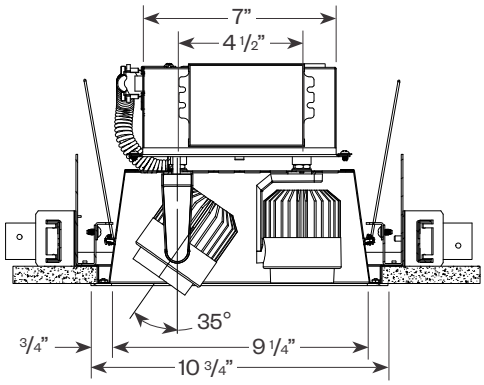

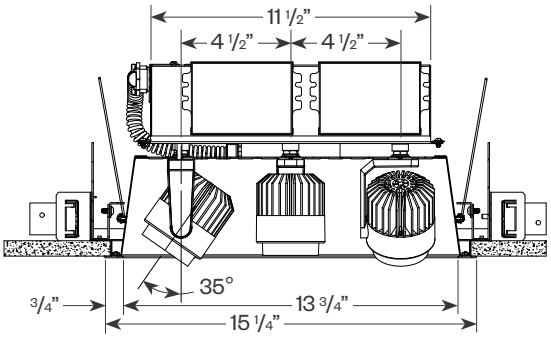

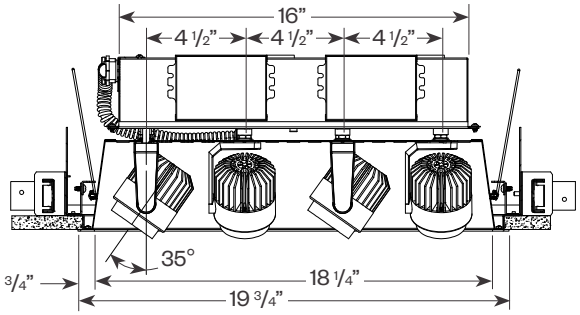

Hornet® HP

Recessed Multiples

amerlux

PROJECT: **TYPE:**

Product Details - Recessed Trimless with ELV/TRIAC Driver

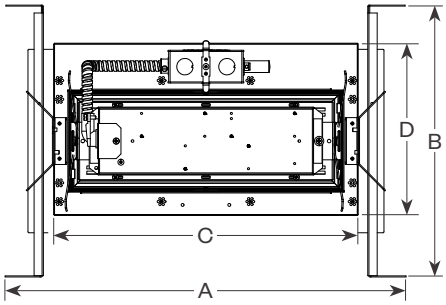

	1 Light	2 Light	3 Light	4 Light
A	12 1/8"	17"	21 1/2"	26"
B	14 1/2" max 25"	14 1/2" max 25"	14 1/2" max 25"	14 1/2" max 25"
C	7 1/16"	11 13/16"	16 5/16"	20 13/16"
D	9 1/8"	9 1/8"	9 1/8"	9 1/8"

Ceiling Cut Out: 1 Light - 5 9/16" x 5 9/16"
2 Light - 5 9/16" x 10 5/16"
3 Light - 5 9/16" x 14 13/16"
4 Light - 5 9/16" x 19 5/16"

End View

Standard Driver ***(ELV/TRIAC)***

1 Light

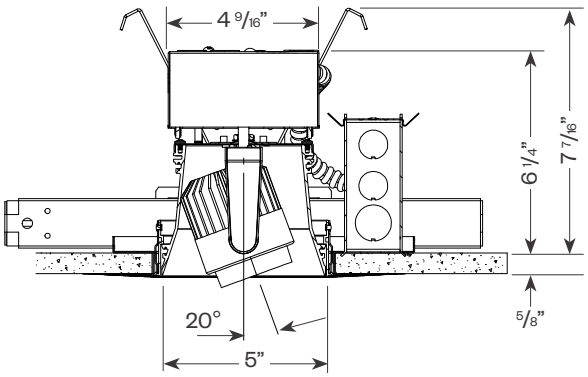

2-4 Light

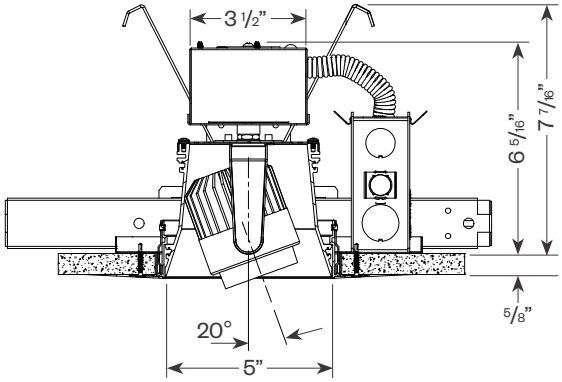

Side View

Standard Driver ***(ELV/TRIAC)***

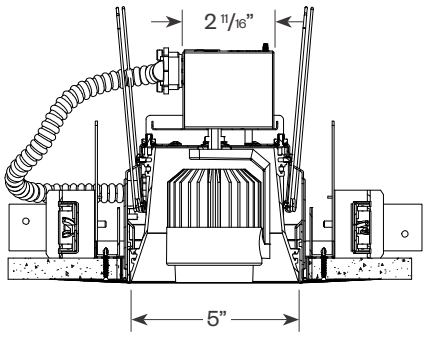

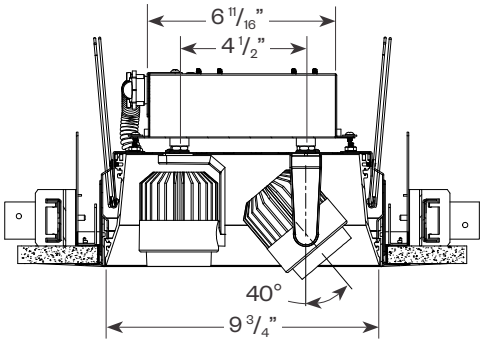

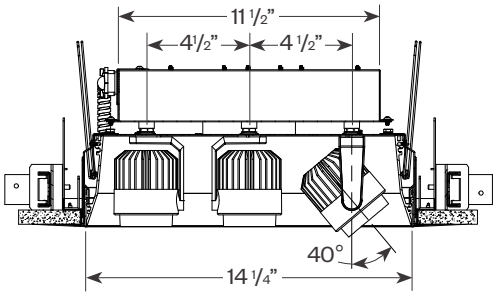

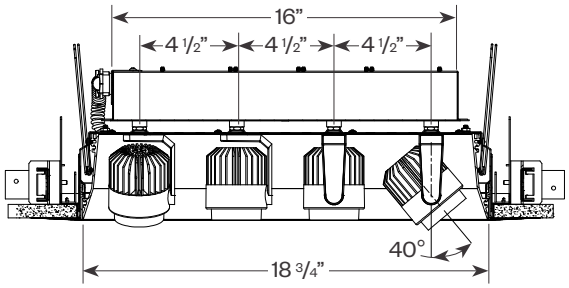

Hornet® HP

Recessed Multiples

amerlux

PROJECT:	TYPE:

Product Details - Recessed Trimless with Hi-lume®/0-10V/DALI Driver *(see trimless detail on page 4)*

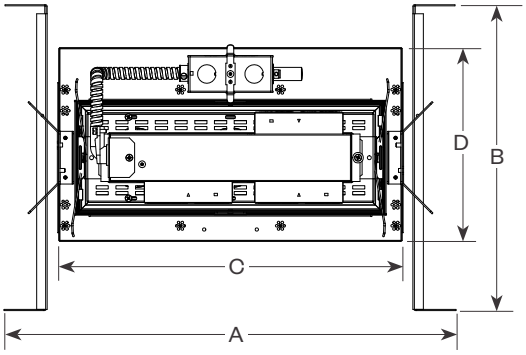

	1 Light	2 Light	3 Light	4 Light
A	12 1/8"	17"	21 1/2"	26"
B	14 1/2" max 25"	14 1/2" max 25"	14 1/2" max 25"	14 1/2" max 25"
C	7 1/16"	11 13/16"	16 5/16"	20 13/16"
D	9 1/8"	9 1/8"	9 1/8"	9 1/8"

Ceiling Cut Out: 1 Light - 5 9/16" x 5 9/16"
2 Light - 5 9/16" x 10 5/16"
3 Light - 5 9/16" x 14 13/16"
4 Light - 5 9/16" x 19 5/16"

End View

Hi-lume®/0-10V/DALI Driver

1 Light

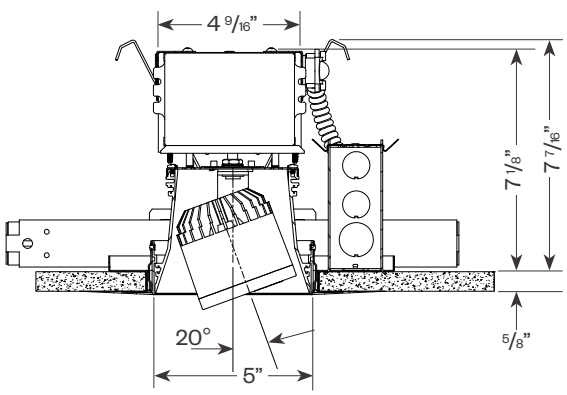

2-4 Light

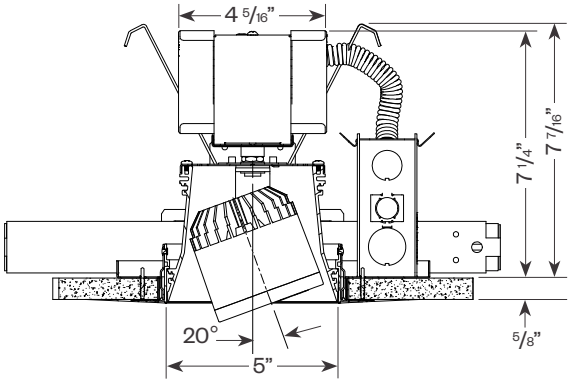

Side View

Hi-lume®/0-10V/DALI Driver

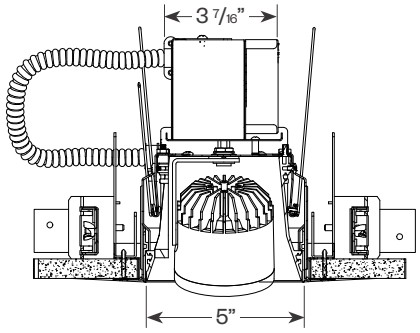

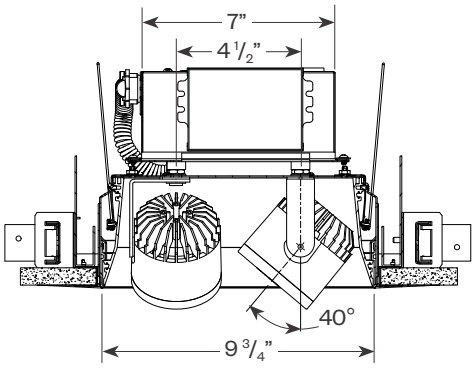

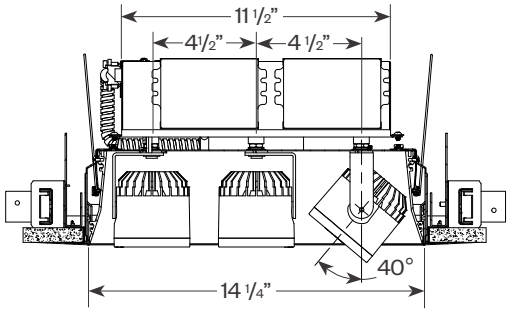

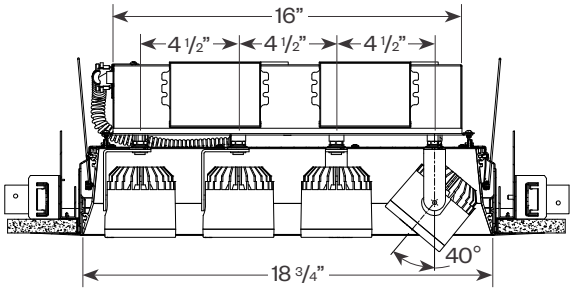

Hornet® HP

Recessed Multiples

amerlux

PROJECT:	TYPE:

Product Details - Emergency Battery Pack *(2-4 light only)*

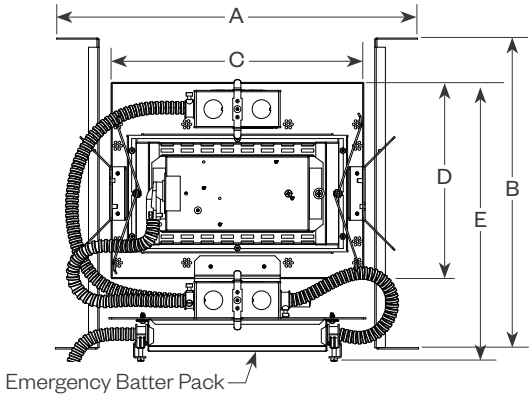

	2 Light	3 Light	4 Light
A	17"	21 1/2"	26"
B	14 1/2" max 25"	14 1/2" max 25"	14 1/2" max 25"
C	11 13/16"	16 5/16"	20 13/16"
D	9 1/8"	9 1/8"	9 1/8"
E	13"	13"	13"

Ceiling Cut Out: 2 Light - 5 9/16" x 10 5/16"
3 Light - 5 9/16" x 14 13/16"
4 Light - 5 9/16" x 19 5/16"

End View

Trimmed

Standard Driver (ELV/TRIAC)
2-4 Light

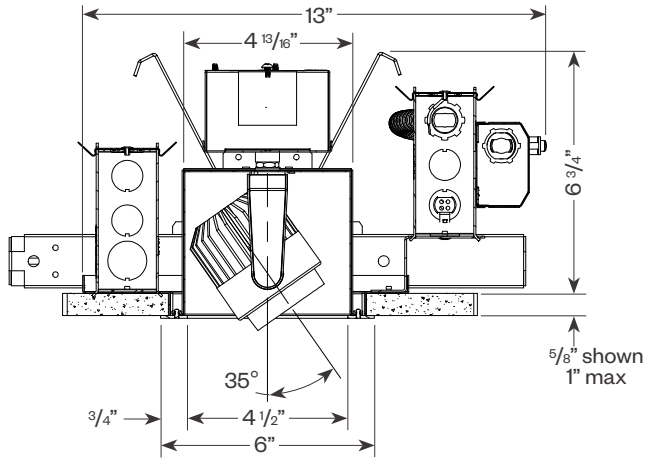

Hi-lume®/0-10V/DALI Driver
2-4 Light

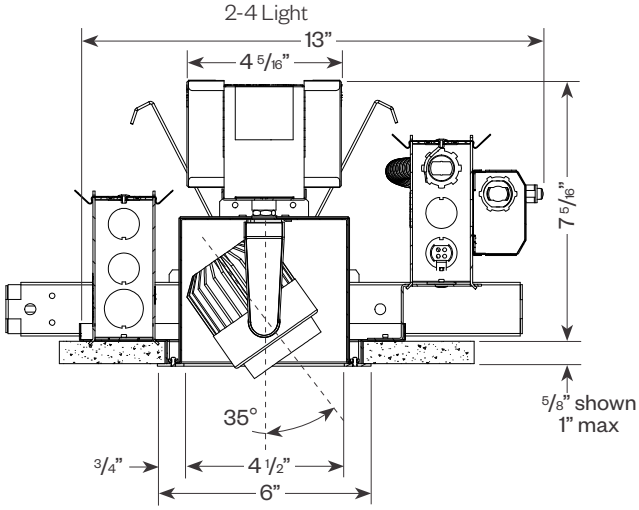

Trimless

Standard Driver (ELV/TRIAC)
2-4 Light

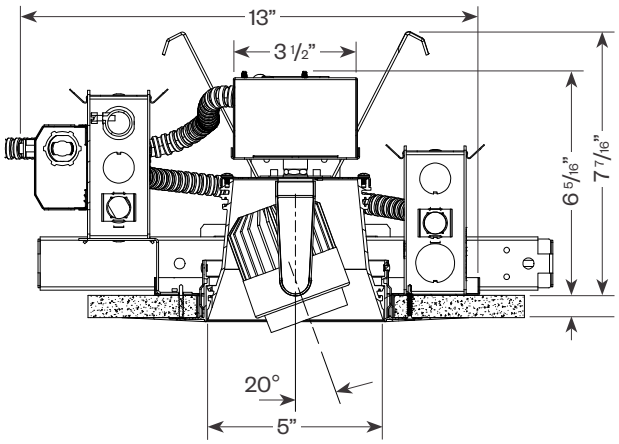

Hi-lume®/0-10V/DALI Driver
2-4 Light

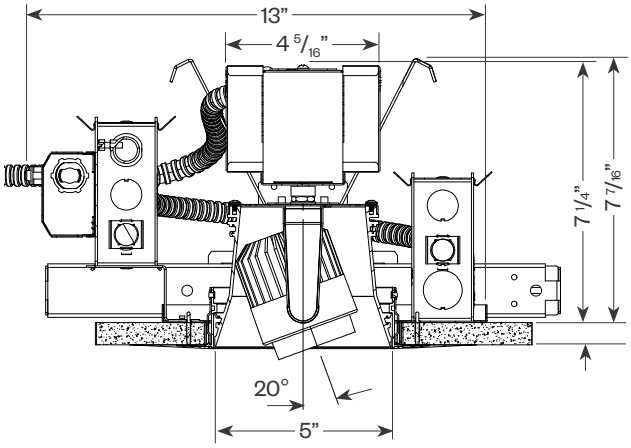

Hornet® HP

Recessed Multiples

amerlux

PROJECT:	TYPE:

Performance Data *(per head)*

Multiplying Factors: *(Multiplying Factor is based on 3000K-83 120V IES file on website)*

CCT:	2700K-83	3000K-83	3500K-83	4000K-83
Factor:	0.96	1.0	1.02	1.04

Wattage:	11W	16W	18W
Factor:	0.71	1.0	1.13

CCT:	2200K-90+*	2700K-90+	3000K-90+	3500K-90+	4000K-90+	CRISP*	3CLA*
Factor:	0.71	0.80	0.83	0.87	0.90	0.65	0.70

Not available for use with 18W

16W LED, 3000K-83

Spot (SP) Distribution, 15°
LTL #14346087.01
Lumens: 1,451

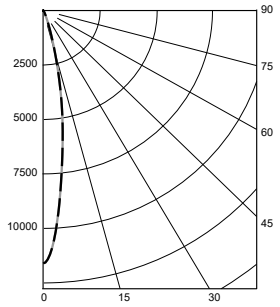

Candelas at Nadir

Deg	Candela
0	11610
5	8378
15	1825
25	257
35	86
45	31

Narrow Flood (NF) Distribution, 22°
LTL #14346087.02
Lumens: 1,390

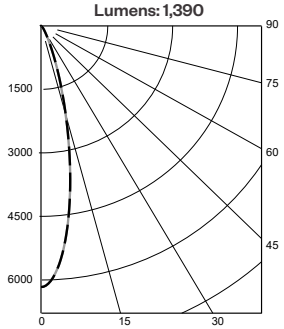

Candelas at Nadir

Deg	Candela
0	6167
5	5391
15	2012
25	426
35	119
45	52

Flood (FL) Distribution, 28°
LTL #14346087.04
Lumens: 1,370

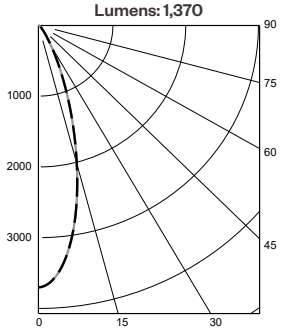

Candelas at Nadir

Deg	Candela
0	3703
5	3440
15	1925
25	651
35	179
45	67

Wide Flood (WF) Distribution, 40°
LTL #14346087.05
Lumens: 1,374

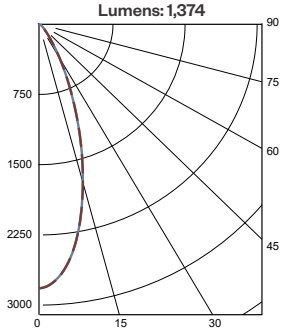

Candelas at Nadir

Deg	Candela
0	2820
5	2674
15	1750
25	763
35	248
45	86

Application Data *(per head)*

Notes and Definitions:

Beam spread is to 50% center beam candlepower *(CBCP)*.
D=Distance to floor or wall.
FC=Footcandles on floor or wall at center beam aiming location.
L=Effective Visual Beam length in feet *(50% of maximum footcandle level)*.
W=Effective Visual Beam width in feet *(50% of maximum footcandle level)*.
CB=Distance across or down to center beam location.

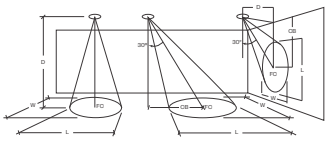

	0° Aiming Angle Horizontal Footcandles				30° Aiming Angle Horizontal Footcandles					30° Aiming Angle Vertical Footcandles					60° Aiming Angle Vertical Footcandles				
	D	FC	L	W	D	FC	L	W	CB	D	FC	L	W	CB	D	FC	L	W	CB
Spot	5.0'	463	1.4	1.4	5.0'	213	2.3	2.2	3.0	3.0'	135	3.4	2.2	5.0	3.0'	403	1.8	1.6	2.0
	7.5'	206	2.1	2.1	7.5'	110	3.3	2.9	4.0	4.0'	87	4.2	2.6	6.0	4.0'	295	2.1	1.8	2.0
	10.0'	116	2.9	2.9	10.0'	64	4.3	3.7	5.0	5.0'	58	5.2	3.2	8.0	5.0'	205	2.5	2.2	3.0
	12.5'	74	3.6	3.6	12.5'	44	5.1	4.5	7.0	6.0'	42	6.2	3.6	9.0	6.0'	152	2.8	2.5	3.0
Narrow Flood	D	FC	L	W	D	FC	L	W	CB	D	FC	L	W	CB	D	FC	L	W	CB
	5.0'	247	1.9	1.9	5.0'	133	2.9	2.7	3.0	3.0'	97	3.7	2.4	4.0	3.0'	280	2.1	1.8	2.0
	7.5'	110	3.0	3.0	7.5'	67	4.0	3.6	4.0	4.0'	57	4.8	3.1	5.0	4.0'	201	2.4	2.2	2.0
	10.0'	62	3.9	3.9	10.0'	40	5.2	4.6	5.0	5.0'	39	5.7	3.6	7.0	5.0'	131	3.0	2.7	3.0
	12.5'	40	5.0	5.0	12.5'	26	6.4	5.7	6.0	6.0'	28	6.9	4.3	8.0	6.0'	99	3.4	3.0	3.0
Flood	D	FC	L	W	D	FC	L	W	CB	D	FC	L	W	CB	D	FC	L	W	CB
	5.0'	168	2.5	2.5	5.0'	86	3.6	3.2	2.0	3.0'	70	3.9	2.9	4.0	3.0'	194	2.4	2.2	2.0
	7.5'	72	3.7	3.7	7.5'	42	5.0	4.6	4.0	4.0'	43	5.1	3.5	5.0	4.0'	138	2.8	2.7	2.0
	10.0'	40	5.0	5.0	10.0'	25	6.5	5.9	5.0	5.0'	28	6.2	4.4	6.0	5.0'	87	3.6	3.2	2.0
	12.5'	25	6.3	6.3	12.5'	16	8.2	7.4	6.0	6.0'	20	7.5	5.2	7.0	6.0'	65	4.0	3.7	3.0
Wide Flood	D	FC	L	W	D	FC	L	W	CB	D	FC	L	W	CB	D	FC	L	W	CB
	5.0'	113	3.0	3.0	5.0'	71	3.9	3.5	2.0	3.0'	60	4.1	3.1	3.0	3.0'	156	2.7	2.5	2.0
	7.5'	50	4.5	4.5	7.5'	34	5.5	5.1	3.0	4.0'	36	5.3	3.9	4.0	4.0'	110	3.1	3.0	2.0
	10.0'	28	6.0	6.0	10.0'	19	7.4	6.8	5.0	5.0'	24	6.4	4.8	5.0	5.0'	72	3.9	3.5	2.0
	12.5'	18	7.5	7.5	12.5'	13	9.1	8.4	6.0	6.0'	17	7.7	5.7	7.0	6.0'	52	4.5	4.2	3.0

Hornet® HP

Recessed Multiples

PROJECT:	TYPE:

Dimming Compatibility

Amerlux® Hornet® fixtures are compatible with all major dimming protocols prevalent in the United States. Please see below for general compatibilities and wiring diagrams. Amerlux recommends testing your unique dimming configuration as the exact full configuration *(Dimmer, Fixture Quantity, Voltage, etc)* may affect dimming performance.

--- NOTE: INFORMATION BELOW IS FOR WIRED DIMMERS ONLY. FOR WIRELESS DIMMERS, CONSULT FACTORY ---

TRIAC *(Forward Phase)* Dimming

Utilizes standard TRIAC dimmers that are in wide use in installations across the US. Best for retrofit applications where TRIAC dimmers are installed.

Notes:

- 120VAC or 277VAC*
- Dims down to 5% light output *(most cases)*
- Consult Dimming manufacturer for installation instructions - **DO NOT SHARE NEUTRALS!**
- Must meet dimmer Minimum Load Requirements per dimming manufacturer

Compatible Dimmers†:	
Wall Box *(TRIAC 120VAC)*	**Central System**
Lutron "Diva"	Lutron "GP" Panel
Lutron "Nova-T"	Lutron Grafik Eye QS
Lutron "Maestro"	
Lutron "Skylark"	

TRIAC Wiring Diagram

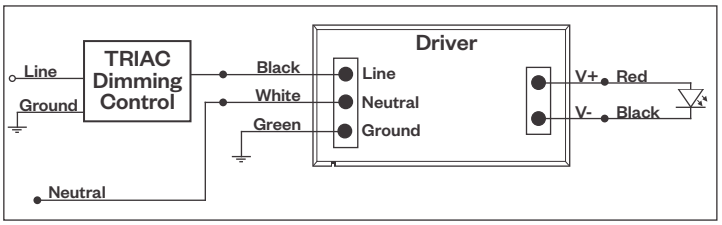

ELV - Electronic Low Voltage *(Reverse Phase)* Dimming

Utilizes specialized "ELV" dimmers.

Notes:

- 120VAC or 277VAC*
- Dims down to 5% light output *(most cases)*
- Consult Dimming manufacturer for installation instructions - **DO NOT SHARE NEUTRALS!**
- Must meet dimmer Minimum Load Requirements per dimming manufacturer

ELV Wiring Diagram

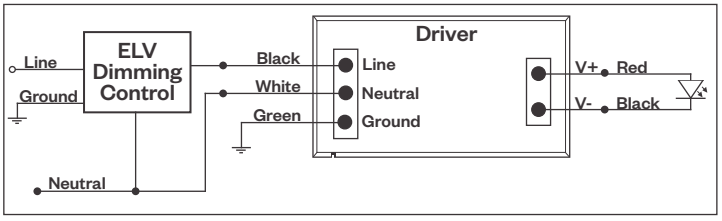

Compatible Dimmers†:		
Wall Box *(ELV 120VAC)*	**Wall Box** *(ELV 277VAC)*	**Central System**
Lutron "Diva"	Leviton Revoir II AWSMT-E	Lutron "GP" Panel with PHPM-PA 120/277VAC
Lutron "Nova-T"		Lutron Grafik Eye QS with PHPM-PA 120/277VAC
Lutron "Maestro"		
Lutron "Skylark"		
Leviton "Surslide"		
Leviton "Vizio"		

Notes:

* Driver is 277VAC dimmable with appropriate dimmer *(by others)*. All provided wiring diagrams show 120VAC wiring colors and method. Please refer to 277VAC dimmer installation instructions for 277VAC wiring diagrams.

† The absence of a dimmer from the lists above does not imply incompatibility. Please consult factory for compatibility inquiries.

Hornet® HP

Recessed Multiples

PROJECT:	TYPE:

Dimming Compatibility *(continued)*

Amerlux® Hornet® fixtures are compatible with all major dimming protocols prevalent in the United States. Please see below for general compatibilities and wiring diagrams. Amerlux recommends testing your unique dimming configuration as the exact full configuration *(Dimmer, Fixture Quantity, Voltage, etc)* may affect dimming performance.

--- NOTE: INFORMATION BELOW IS FOR WIRED DIMMERS ONLY. FOR WIRELESS DIMMERS, CONSULT FACTORY ---

0-10V Dimming

Integrates into a variety of building management and daylighting controls

Notes:

- 120VAC or 277VAC*
- Dims down to 1% light output
- Requires interface to turn off power to driver
- Consult Dimming manufacturer for installation instructions - **DO NOT SHARE NEUTRALS!**

Compatible Dimmers†:		
Wall Box		**Central System**
Lutron "Diva" - DVSTV	Leviton Renoir II 0-10V	Lutron Grafik Eye with GRX-TVI Interface

0-10V Wiring Diagram

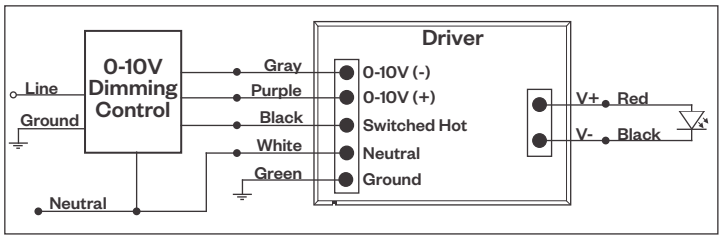

Lutron LDE1 Dimming

Integrates into Lutron EcoSystem building management

Notes:

- 120VAC or 277VAC*
- Dims down to 1% Soft-On/Fade-to-Black
- EcoSystem Control
- Consult Dimming manufacturer for installation instructions - **DO NOT SHARE NEUTRALS!**

Compatible Dimmers†:	
Lutron ECO System	**Central System**
Pow Pak Dimming Modules	Lutron EcoSystem compatible controls
Energi Savr Node	
Grafik Eye QS/Homeworks	
QS Control Unit	
Quantum Hub	
Homeworks QS/My Room	

LDE1 *(HILUME-H-ECO)* EcoSystem Digital Control Wiring Diagram

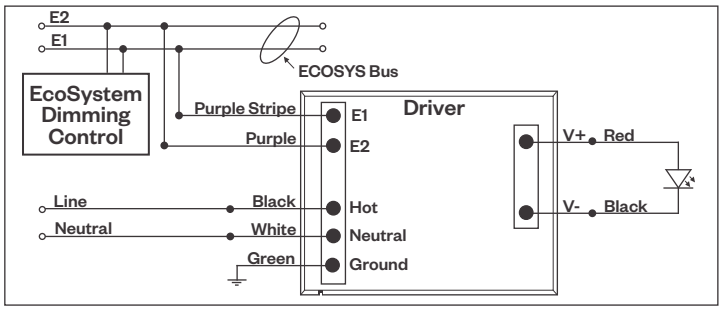

DALI Dimming

Digital control protocol allows individual fixture control

Notes:

- 120VAC - 277VAC*
- Dims down to 1% light output in most cases

Compatible Dimmers†:	
Wall Box *(3-Wire Fluorescent)*	**Central System**
Leviton CD250 Controller	Dynalite
	Fifth Light

DALI Wiring Diagram

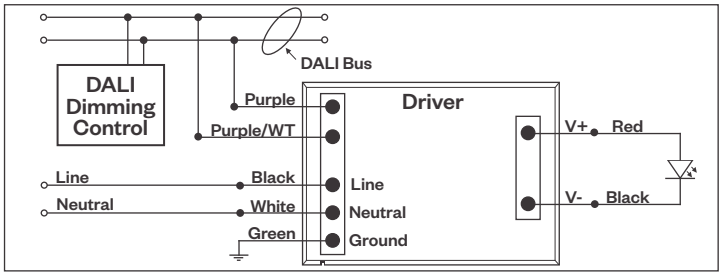

Notes:

* Driver is 277VAC dimmable with appropriate dimmer *(by others)*. All provided wiring diagrams show 120VAC wiring colors and method. Please refer to 277VAC dimmer installation instructions for 277VAC wiring diagrams.

† The absence of a dimmer from the lists above does not imply incompatibility. Please consult factory for compatibility inquiries.

Hornet® HP

Recessed Multiples

PROJECT:	TYPE:

Emergency Battery Pack
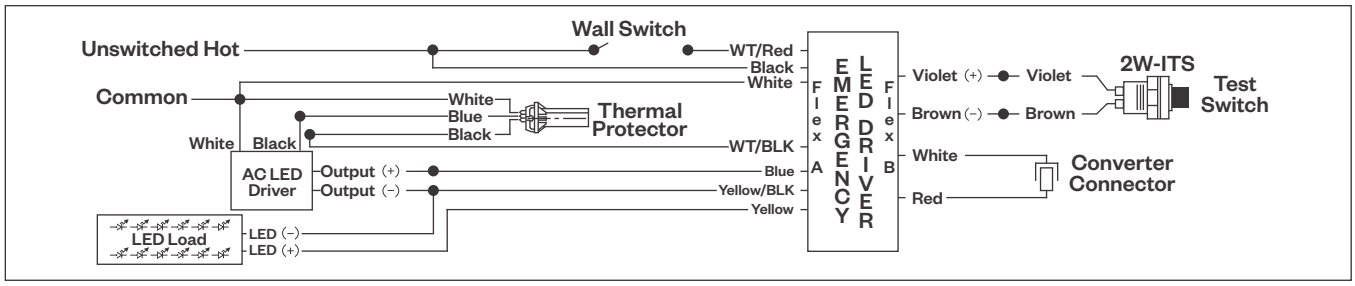
Wiring Diagram