Slots & Dots - Dots

Accents/Pendants *(for S&D 48V Track System)*

PROJECT:	TYPE:

Features

Slots & Dots, a 48V Track lighting system, connects all the dots for architects and lighting designers: color, comfort, controls and configurability. Slots & Dots is an easily configurable low voltage track lighting system that creates visual ambience for hospitality, residential, commercial and retail environments. Featuring surface, recessed or pendant mounting options, with easy light module in linear and accent that can be easily snapped in and out as needed. Slots are made up of linear modules to create visual interest, wall grazing and glare free accent. Dots deliver focused beams of light from either an accent pendant or surface mounted accent that bring items into focus.

DOT-A1L

DOT2-AL

DOT-A1D

DOT2-AD

DOT-P1

DOT2-P

Product Overview

Type:	48V Track Accent or Pendant Module
Wattage:	**DOT-A1x/P1:** 7W
	DOT2-Ax/P: 8W, 10W, 12W, 14W, 16W, 22W
	DOT2-Ax/P-SNSP: 8W
Color Temp:	**DOT-A1x/P1:** 3500K-80, 4000K-80, 2700K-90+, 3000K-90+
	DOT2-Ax/P: 2700K-90+, 3000K-90+, 3500K-90+, 4000K-90+, 3K Class A
	DOT2-Ax/P-SNSP: 2400K-90+, 2700K-90+, 3000K-90+, 3500K-90+, 4000K-90+
CRI:	80 or 90+ typ. *(consult ordering information)*
	Signature LED options in 2700K & 3000K
Dimming:	DALI 1% Dim
	0-10V 1% dim
Weight:	**DOT-A1x:** 0.4 lbs; **DOT-PI:** 0.6 lbs
	DOT2-Ax: 0.8 lbs; **DOT2-P:** 1.1 lbs

Certifications

5 year limited warranty AMERLUX LED

Fixture Summary

Performance Data

Watts	Delivered Lumens	LPW	Color Temp
DOT-A1x/P1			
7	391	55.9	3000K-90+
DOT2-Ax/P			
8	946	118.3	3000K-90+
10	1276	127.6	3000K-90+
12	1386	115.5	3000K-90+
14	1584	113.1	3000K-90+
16	1804	112.8	3000K-90+
22	2200	100	3000K-90+
DOT2-Ax/P *(SNSP)*			
8	522	65	3000K-90+

Data is based on 3000K-90 120V IES files available on website.

NOTE: For use with Amerlux Slots & Dots Low Voltage Track

See separate spec sheets for track versions:

SD-TSD deep profile pendant/surface track

SD-TRD deep profile recessed track

SD-TSL low profile pendant/surface track

SD-TRL low profile recessed track

Slots & Dots - Dots

Accents/Pendants *(for S&D 48V Track System)*

amerlux

PROJECT:	TYPE:

Ordering Information - Small Accent/Pendant Module

[T24] JA8/Title 24 compliant.

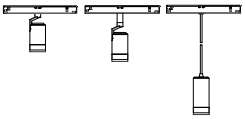

_____.____.____.____._____._____

1 2 3 4 5 6

1	Model
	DOT-A1L small accent for low profile track
	DOT-A1D small accent for deep profile track
	DOT-P1 small pendant with 10' field adjustable cord

2	Finish
	MW matte white
	MB matte black

3	Beam Spread
	SP spot, 13°
	NF narrow flood, 18°
	FL flood, 28°

4	Color Temp-CRI	
	80 CRI	90+ CRI[T24]
	35 3500K-80	**279** 2700K-90+
	40 4000K-80	**309** 3000K-90+

5	Driver
	DALI DALI driver, 1% dim *(standard)*
	0-10V[T24] 0-10V driver, 1% dim

6	Options/Accessories *(not JA8/Title 24 compliant)*
	AH accessory holder
	HEX hexcell louver *(requires AH)*

Ordering Information - Large Accent/Pendant Module

[T24] JA8/Title 24 compliant.

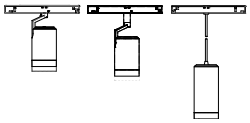

_____.____.____.____._____._____._____

1 2 3 4 5 6 7

1	Model
	DOT2-AL large accent for low profile track
	DOT2-AD large accent for deep profile track
	DOT2-P large pendant with 10' field adjustable cord

2	Wattage
	8 8W *(946 lm)*
	10 10W *(1276 lm)*
	12 12W *(1386 lm)*
	14 14W *(1584 lm)*
	16 16W *(1804 lm)*
	22 22W *(2200 lm)*

3	Finish
	MW matte white
	MB matte black

4	Beam Spread
	20D narrow flood, 20°
	30D flood, 30°
	40D wide flood, 40°
	50D very wide flood, 50°
	LS linear spread, 60°x10° *(reduces # of accessories by 1, if applicable)*

5	Color Temp-CRI		
	90+ CRI[T24]		
	279 2700K-90+	**SA27** Signature Ambiance 2700K-90+	**3CLA** 3K Class A
	309 3000K-90+	**SA30** Signature Ambiance 3000K-90+	
	359 3500K-90+	**SW30** Signature White 3000K-90+	
	409 4000K-90+	**SC30** Signature Color 3000K-90+	

6	Driver
	DALI DALI driver, 1% dim *(standard)*
	0-10V[T24] 0-10V driver, 1% dim

7	Options/Accessories *(not JA8/Title 24 compliant)*
	(standard front door accepts up to 2 accessories)
	SN snoot *(accepts up to 2 accessories or cross blade + 1 accessory)*
	HEX hexcell louver
	SOL solite beam softening lens
	CB cross blade *(requires snoot)*

[T24] JA8/Title 24 Compliant

Slots & Dots - Dots

Accents/Pendants *(for S&D 48V Track System)*

PROJECT:	TYPE:

Ordering Information - Large Accent/Pendant Module with Super Narrow Spot

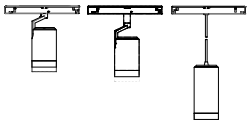

_____ . _____ . _____ . _____ . _____ . _____

1 2 3 4 5 6

1	Model
	DOT2-AL-SNSP large accent for low profile track
	DOT2-AD-SNSP large accent for deep profile track
	DOT2-P-SNSP large pendant with 10' field adjustable cord

2	Wattage
	8 8W *(522 lm)*

3	Finish
	MW matte white
	MB matte black

4	Color Temp-CRI
	90+ CRI
	249 2400K-90+
	279 2700K-90+
	309 3000K-90+
	359 3500K-90+
	409 4000K-90+

5	Driver
	DALI DALI driver, 1% dim *(standard)*
	0-10V 0-10V driver, 1% dim

6	Options/Accessories *(not JA8/Title 24 compliant)*
	(standard front door accepts up to 2 accessories)
	SN snoot *(accepts up to 2 accessories or cross blade + 1 accessory)*
	HEX hexcell louver
	SOL solite beam softening lens
	CB cross blade *(requires snoot)*

Slots & Dots - Dots

Accents/Pendants *(for S&D 48V Track System)*

PROJECT:	TYPE:

Specifications

Application

Hospitality and retail task lighting

Construction

Complete die-cast optical head construction
No exposed wiring

Optical

Tilt: 0-90° *(for accent head)*
Rotation: 360°+ *(for accent head)*
Beam Spreads:
DOT-A1x/P1: Spot 13°; Narrow Flood 18°; Flood 28°
DOT2-Ax/P: Narrow Flood 20°; Flood 30°; Wide Flood 40°; Very Wide Flood 50°; Linear Spread 60° x 10°
DOT2-Ax/P-SNSP: Super Narrow Spot 10°

LED

Color Temp-CRI Options:
DOT-A1x/P1: 3500K-80, 4000K-80, 2700K-90+, 3000K-90+
DOT2-Ax/P: 2700K-90+, 3000K-90+, 3500K-90+, 4000K-90+; Signature† Ambiance, White, and Color options available; 3K Class A*
DOT2-Ax/P-SNSP: 2400K-90+, 2700K-90+, 3000K-90+, 3500K-90+, 4000K-90+
R9 Values:
Small Accents: 7 *(80 CRI)*, 77 *(90+ CRI)*
Large Accents: 55 *(90+ CRI)*
Binning: 3 MacAdam *(SDCM)*
Life: 50,000+ hrs, > 70% of initial lumens at 50,000 hrs

† ***Signature Ambiance*** *(2700K & 3000K): A refined, warm light recipe ideal for hospitality, residential-style commercial spaces, and retail. It accentuates woods, textiles, bronze, and darker finishes, creating a relaxed and inviting luxury environment.*

† ***Signature White*** *(3000K): A premium white option built for crisp displays, clean architectural finishes, and retail settings. It enhances white surfaces and visual clarity, ensuring whites read brighter without sacrificing refinement.*

† ***Signature Color*** *(3000K): A vibrant, color-enhancing option designed for spaces where merchandise, fabrics, and finishes need to stand out. It heightens the contrast between colors and whites, delivering deeper, richer presentations for dynamic retail and hospitality experiences.*

* ***Class A LED****: Class A LED's have a CRI > 80 and a GAI > 80. CRI defines color "Naturalness" and GAI defines color "Saturation." Both being high delivers rich colors and pure whites.*

Electrical

Wattage:
DOT-A1x/P1: 7W
DOT2-Ax/P: 10W, 12W, 14W, 16W, 22W
DOT2-Ax/P-SNSP: 8W
Electronic constant current LED driver, 48V input 18AWG, 15 Amp

Drivers

DALI driver, 1% dimming
0-10V driver, 1% dim

Finish

Powder coat paint, matte black or matte white

Mounting

A mechanical adapter allows for a quick and tool-less mounting to Amerlux's 48V track system, which saves times during installation and allows for easy reconfiguration

Certifications

CSA listed
Indoor use only
JA8/Title 24 Compliant *(see ordering page for options that apply)*

Warranty

5 year limited warranty

Minimum Distance with Live End & L Connector

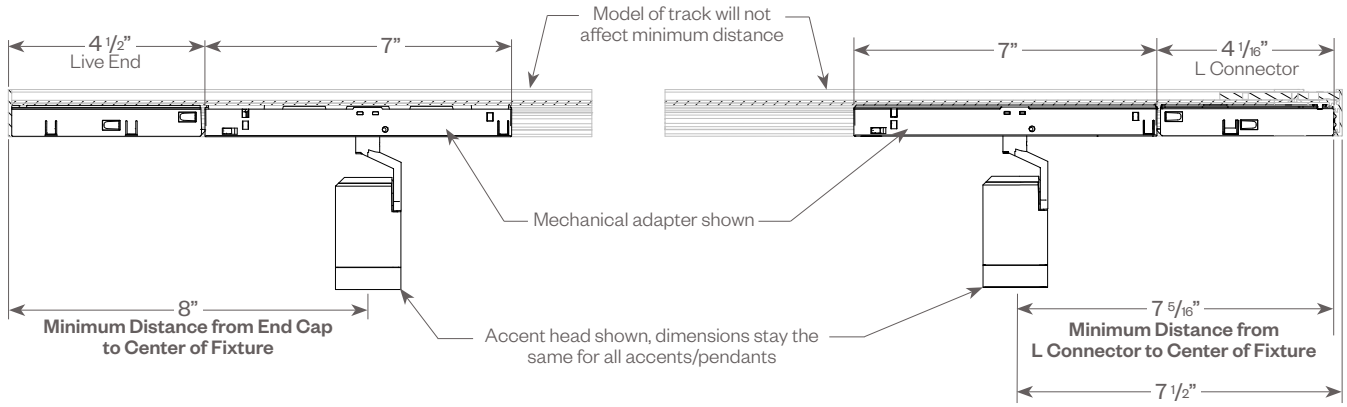

Slots & Dots - Dots

Accents/Pendants *(for S&D 48V Track System)*

PROJECT:	TYPE:

Product Details - For S&D 48V Deep Profile Pendant/Surface Track *(SD-TSD)*

DOT-A1D

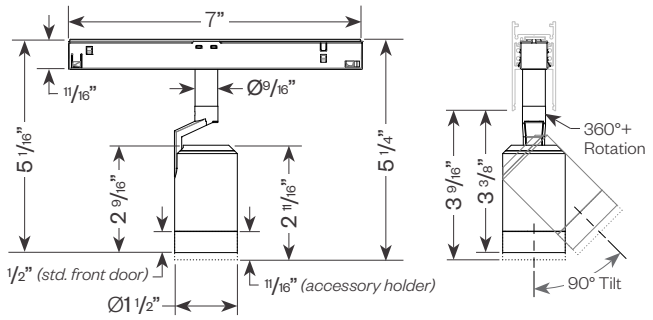

DOT2-AD

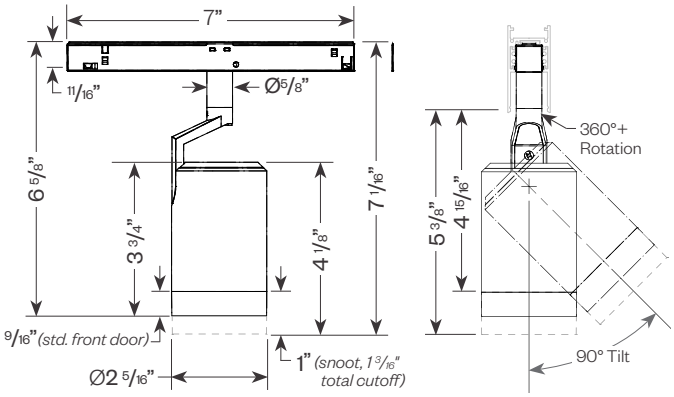

DOT-P1

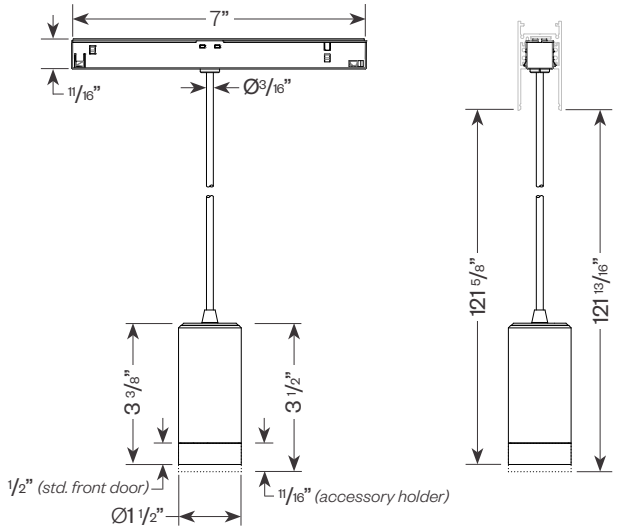

DOT2-P

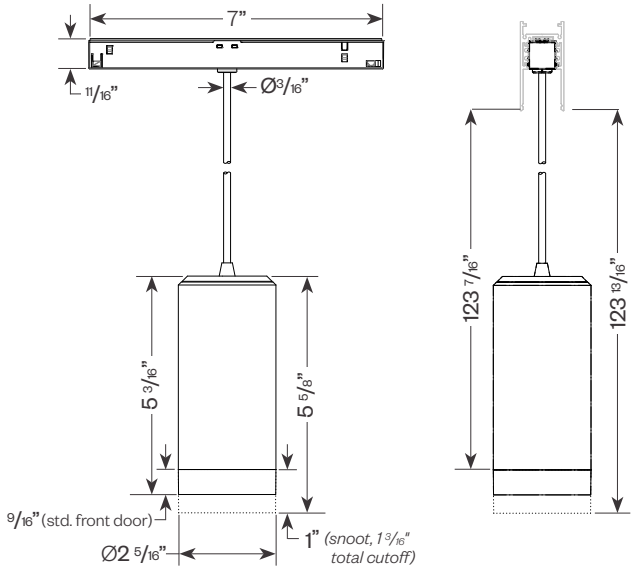

Slots & Dots - Dots

Accents/Pendants *(for S&D 48V Track System)*

PROJECT:	TYPE:

Product Details - For S&D 48V Deep Profile Recessed Track *(SD-TRD)*

DOT-A1D

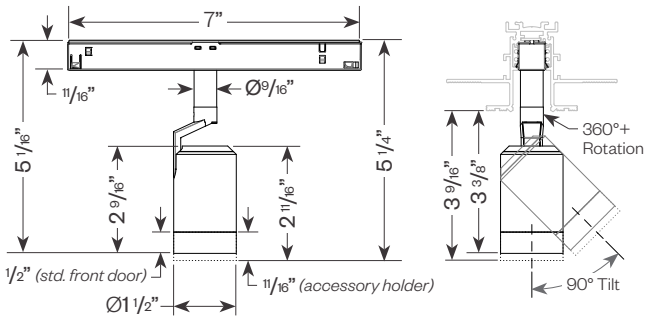

DOT2-AD

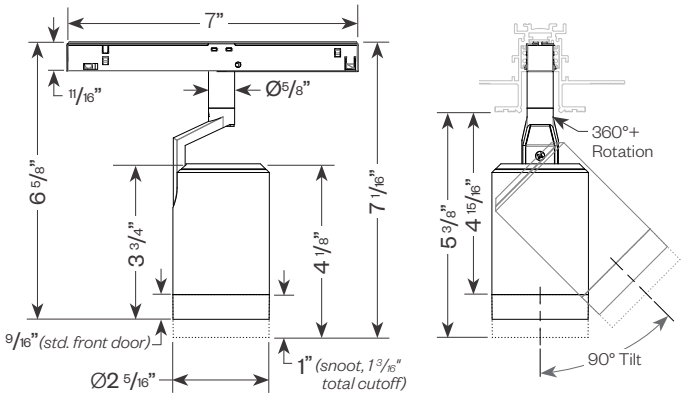

DOT-P1

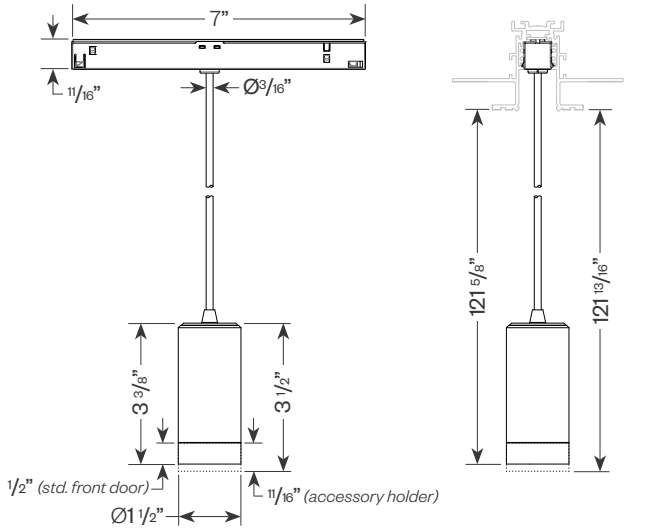

DOT2-P

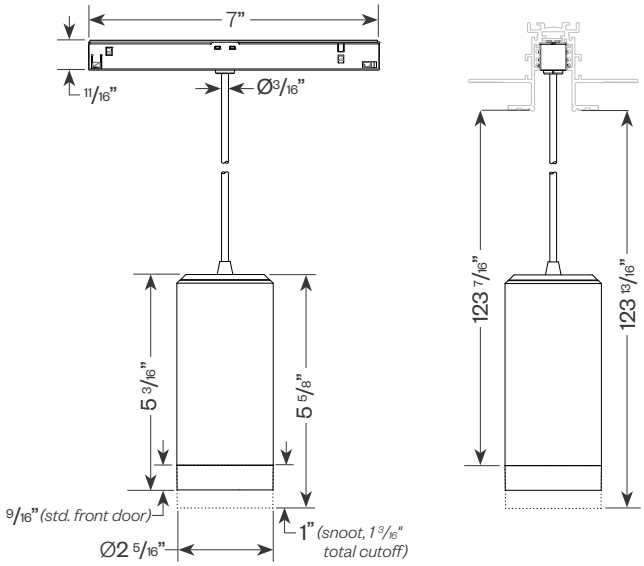

Slots & Dots - Dots

Accents/Pendants *(for S&D 48V Track System)*

PROJECT:	TYPE:

Product Details - For S&D 48V Low Profile Pendant/Surface Track *(SD-TSL)*

DOT-A1L

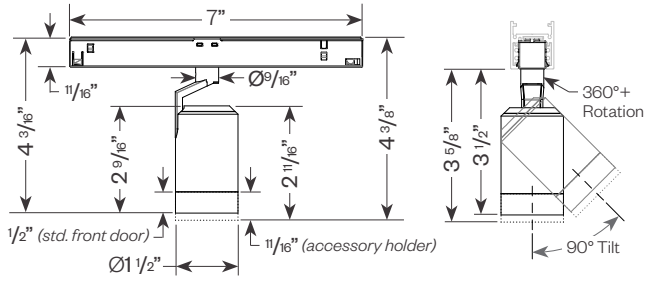

DOT2-AL

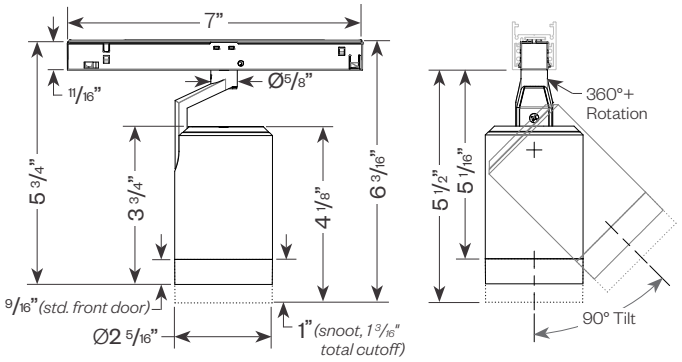

DOT-P1

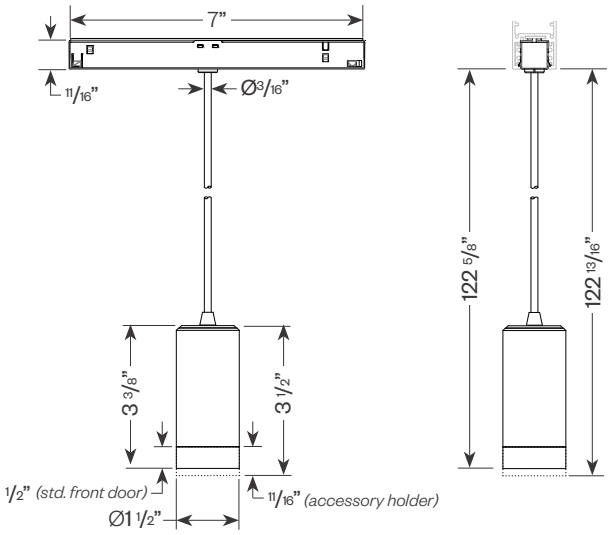

DOT2-P

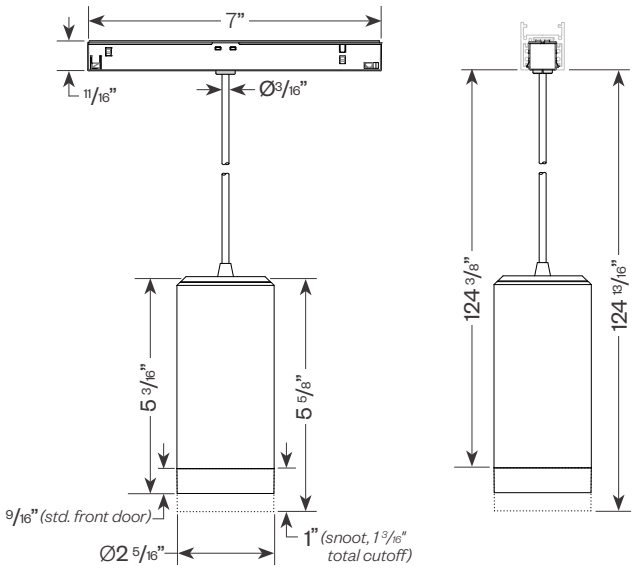

Slots & Dots - Dots

Accents/Pendants *(for S&D 48V Track System)*

PROJECT:	TYPE:

Product Details - For S&D 48V Low Profile Recessed Track *(SD-TRL)*

DOT-A1L

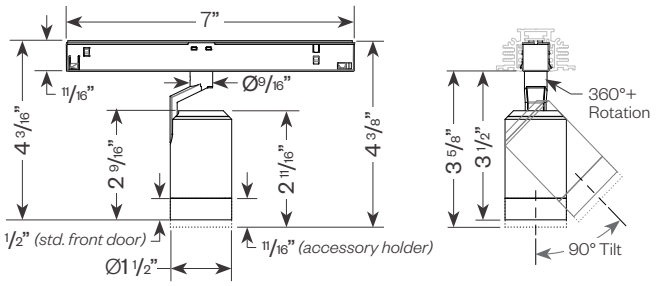

DOT2-AL

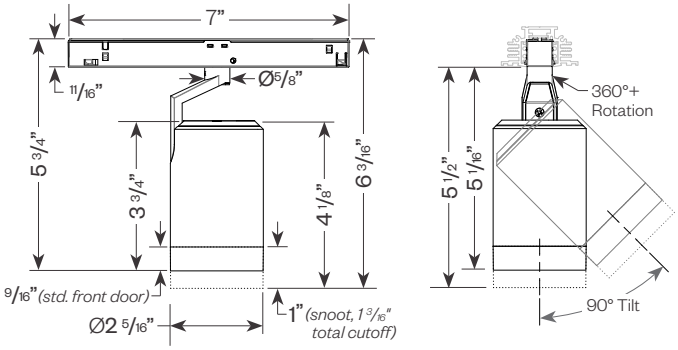

DOT-P1

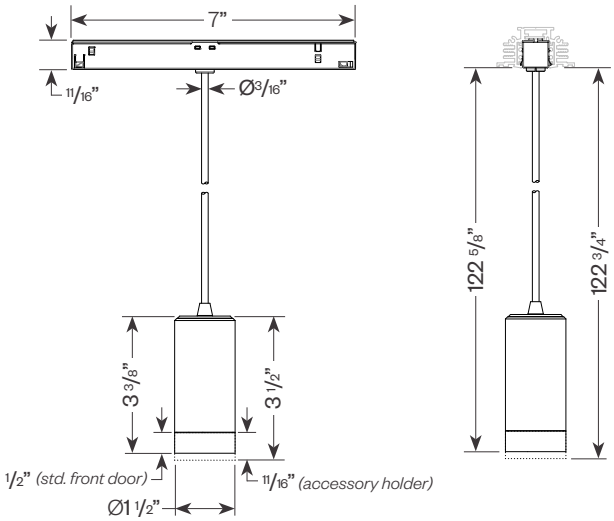

DOT2-P

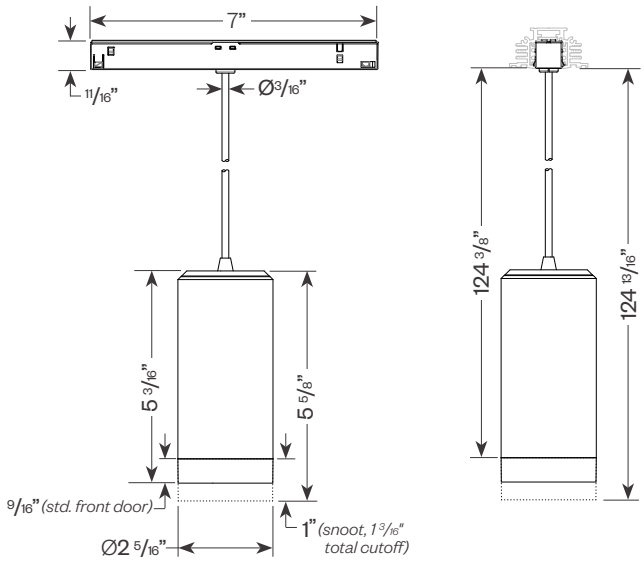

Slots & Dots - Dots

Accents/Pendants *(for S&D 48V Track System)*

PROJECT: **TYPE:**

Performance Data - Small Accent *(DOT-A1x/P1)*

Multiplying Factors: *(Multiplying Factor is based on 3000K-90 120V IES file on website)*

CCT:	3500K-80	4000K-80	2700K-90+	3000K-90+
Factor:	1.20	1.25	0.96	1.0

7W LED, 3000K-90+

DOT-A1x/P1 SP, 13°
LTL # 12914370.01
Lumens: 391

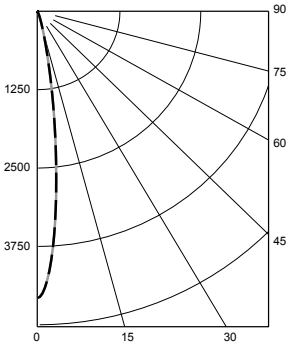

Candelas at Nadir

Deg	Candela
0	4573
5	3137
15	340
25	48
35	15
45	10

DOT-A1x/P1 NF, 18°
LTL # 12914370.02
Lumens: 381

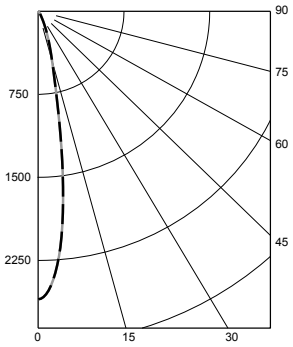

Candelas at Nadir

Deg	Candela
0	2601
5	2140
15	440
25	102
35	31
45	13

DOT-A1x/P1 FL, 28°
LTL # 12914370.03
Lumens: 379

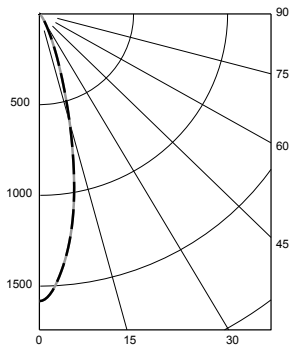

Candelas at Nadir

Deg	Candela
0	1583
5	1394
15	576
25	132
35	33
45	10

Application Data - Small Accent *(DOT-A1x/P1)*

Notes and Definitions:

Beam spread is to 50% center beam candlepower *(CBCP)*.
D=Distance to floor or wall.
FC=Footcandles on floor or wall at center beam aiming location.
L=Effective Visual Beam length in feet *(50% of maximum footcandle level)*.
W=Effective Visual Beam width in feet *(50% of maximum footcandle level)*.
CB=Distance across or down to center beam location.

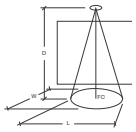

0° Aiming Angle
Horizontal
Footcandles

	D	FC	L	W
Spot	5.0'	102	1.6	1.6
	7.5'	60	2.2	2.2
	10.0'	38	2.8	2.8
	12.5'	26	3.3	3.3
Narrow Flood	D	FC	L	W
	5.0'	71	1.9	1.9
	7.5'	39	2.6	2.6
	10.0'	23	3.3	3.3
	12.5'	16	3.9	3.9
Flood	D	FC	L	W
	5.0'	50	2.5	2.5
	7.5'	25	3.4	3.4
	10.0'	15	4.5	4.5
	12.5'	10	5.5	5.5

Slots & Dots - Dots

Accents/Pendants *(for S&D 48V Track System)*

PROJECT:	TYPE:

Performance Data - Large Accent *(DOT2-xx) (continued)*

Multiplying Factors: *(Multiplying Factor is based on 3000K-90 120V IES file on website)*

Wattage:	8W	10W	12W	14W	16W	22W
Factor:	0.43	0.58	0.63	0.72	0.82	1.0

CCT:	2700K-90+	3000K-90+	3500K-90+	4000K-90+	3CLA
Factor:	1.005	1.000	1.016	1.029	0.667

22W LED, 3000K-90+

DOT2-Ax/P NF, 20°
LTL # 15406782.05
Lumens: 2047

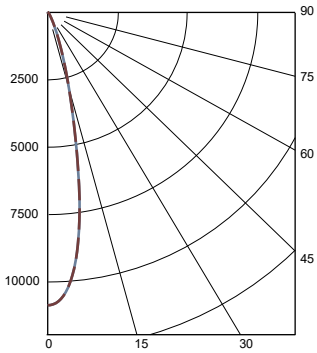

Candelas at Nadir

Deg	Candela
0	10870
5	9780
15	2709
25	504
35	141
45	70

DOT2-Ax/P FL, 30°
LTL # 15406782.06
Lumens: 2200

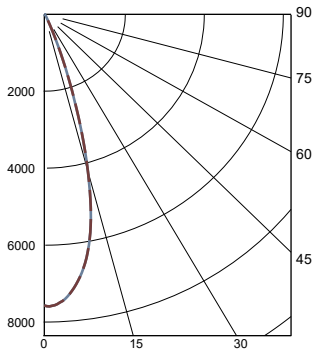

Candelas at Nadir

Deg	Candela
0	7570
5	7299
15	4243
25	503
35	92
45	47

DOT2-Ax/P WF, 40°
LTL # 15406782.07
Lumens: 2108

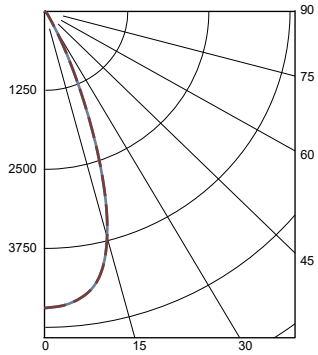

Candelas at Nadir

Deg	Candela
0	4694
5	4631
15	3665
25	1019
35	155
45	62

DOT2-Ax/P VWF, 50°
LTL # 15406782.08
Lumens: 2096

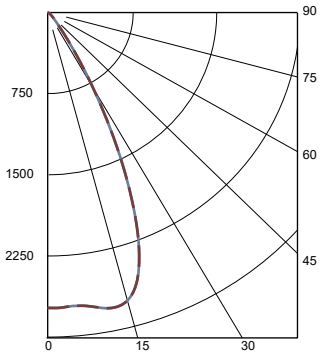

Candelas at Nadir

Deg	Candela
0	2731
5	2722
15	2757
25	1641
35	334
45	74

Application Data - Large Accent *(DOT2-xx) (continued)*

Notes and Definitions:

Beam spread is to 50% center beam candlepower *(CBCP)*.
D=Distance to floor or wall.
FC=Footcandles on floor or wall at center beam aiming location.
L=Effective Visual Beam length in feet *(50% of maximum footcandle level)*.
W=Effective Visual Beam width in feet *(50% of maximum footcandle level)*.
CB=Distance across or down to center beam location.

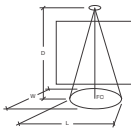

0° Aiming Angle Horizontal Footcandles

D	FC	L	W
5.0'	338	2.2	2.2
7.5'	173	3.0	3.0
10.0'	102	3.8	3.8
12.5'	67	4.8	4.8

0° Aiming Angle Horizontal Footcandles

D	FC	L	W
5.0'	272	2.8	2.8
7.5'	129	4.1	4.1
10.0'	74	5.4	5.4
12.5'	48	6.8	6.8

0° Aiming Angle Horizontal Footcandles

D	FC	L	W
5.0'	177	3.3	3.3
7.5'	81	5.0	5.0
10.0'	46	6.8	6.8
12.5'	30	8.5	8.5

0° Aiming Angle Horizontal Footcandles

D	FC	L	W
5.0'	107	4.5	4.5
7.5'	48	6.8	6.8
10.0'	27	9.0	9.0
12.5'	18	11.3	11.3

Slots & Dots - Dots

Accents/Pendants *(for S&D 48V Track System)*

PROJECT:	TYPE:

Performance Data - Large Accent with Super Narrow Spot *(DOT2-xx)*

Multiplying Factors: *(Multiplying Factor is based on 3000K-90 120V IES file on website)*

CCT:	2400K-90+	2700K-90+	3000K-90+	3500K-90+	4000K-90+
Factor:	0.82	0.96	1.0	1.05	1.07

8W LED, 3000K-90+

DOT2-Ax/P SNSP, 10°
LTL # 15175288.01
Lumens: 522

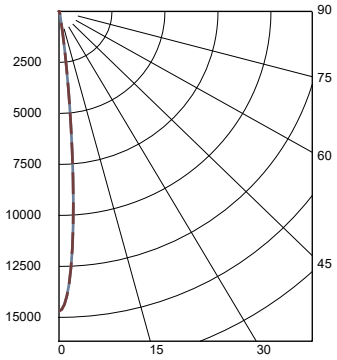

Candelas at Nadir

Deg	Candela
0	14700
5	6914
15	173
25	46
35	9
45	3

Application Data - Large Accent *(DOT2-xx)*

Notes and Definitions:

Beam spread is to 50% center beam candlepower *(CBCP)*.
D=Distance to floor or wall.
FC=Footcandles on floor or wall at center beam aiming location.
L=Effective Visual Beam length in feet *(50% of maximum footcandle level)*.
W=Effective Visual Beam width in feet *(50% of maximum footcandle level)*.
CB=Distance across or down to center beam location.

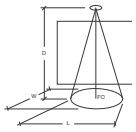

0° Aiming Angle
Horizontal
Footcandles

D	FC	L	W
5.0'	210	1.3	1.3
7.5'	151	1.5	1.5
10.0'	106	1.9	1.9
12.5'	76	2.4	2.4

Slots & Dots - Dots

Accents/Pendants *(for S&D 48V Track System)*

PROJECT:	TYPE:

Dimming Compatibility

Amerlux® Slots & Dots 48V system is compatible with DALI system. Please see below for wiring diagrams. Amerlux recommends testing your unique dimming configuration as the exact full configuration *(Dimmer, Fixture Quantity, Voltage, etc)* may affect dimming performance.

--- NOTE: INFORMATION BELOW IS FOR WIRED DIMMERS ONLY. FOR WIRELESS DIMMERS, CONSULT FACTORY ---

Wired Control - DALI

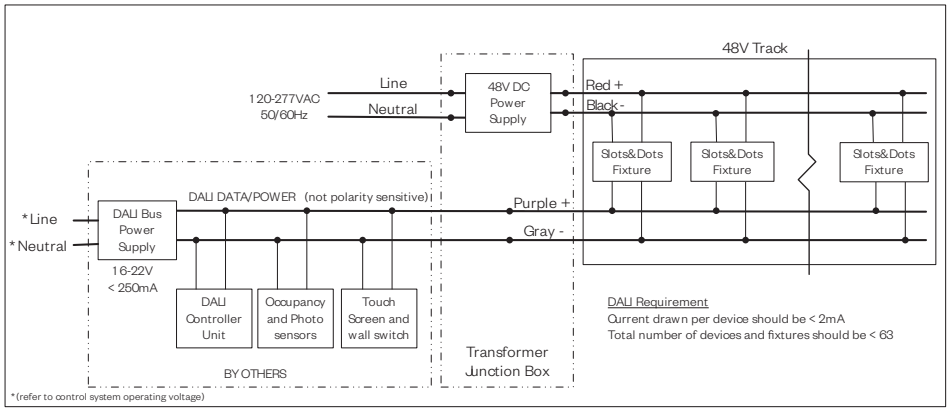

Suggested Switches for Wired Connection		
Manufacturer	**Model**	**Description**
Loytec DALI PSU	L-DALI-PWR2-U	DALI Bus Power Supply, 85-240VAC input, 2 channel DALI PSU, 116 mA per channel
Loytec Controller	L-DALI-ME204-U	DALI Controller, 4 channel DALI
Loytec Controller	L-DALI-ME201-U	DALI Controller, 1 DALI channel with integrated DALI power supply
B.E.G	PP-DALI-PS	DALI Bus Power Supply, 120-277VAC input, 100 mA bus power

Wired Control - 0-10V

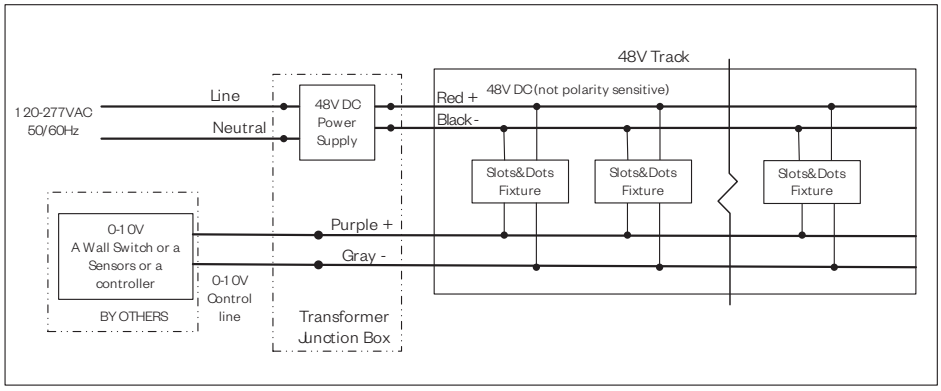

Notes:

- 120V or 277V*
- Dims down to 1% light output
- Requires interface to turn off power to driver
- Consult Dimming manufacturer for installation instructions - DO NOT SHARE NEUTRALS!

Compatible Dimmers†:		
Wall Box		**Central System**
Lutron "Diva" - DVSTV	Leviton Renoir II 0-10V	Lutron Grafik Eye with GRX-TVI Interface

Notes:

* Driver is 277VAC dimmable with appropriate dimmer *(by others)*. All provided wiring diagrams show 120VAC wiring colors and method. Please refer to 277VAC dimmer installation instructions for 277VAC wiring diagrams.

† The absence of a dimmer from the lists above does not imply incompatibility. Please consult factory for compatibility inquiries.