Cylindrix® III

Recessed Multiples

PROJECT: **TYPE:**

Features

Cylindrix® III Recessed LED, the best combination of optical and thermal performance, aesthetics and visual comfort in an recessed accent. Features a deeply recessed single LED light source for enhanced visual comfort and control, integrated heat sink and high performance interchangeable reflector optics *(for 15°/25°/40° beam spreads only)*. A 10° beam spread is also available but not interchangeable with the other beam options. Available in 1, 2 or 3 light configurations.

C3R

Product Overview

Type:	Recessed Multiple, Accent & Display
Wattage:	16W, 19W, 23W, 27W, 31W
Color Temp:	2700K, 3000K, 3500K, 4000K Signature LED options in 2700K & 3000K
CRI:	83 typ. or 90+ typ. Class A LEDs available
Dimming:	TRIAC & ELV, 5% Dim, 120/277VAC Lutron LDE1 Hi-lume® 1% Soft-On/Fade-to-Black, 120/277VAC 0-10V, 1% Dim, 120/277VAC DALI, 1% Dim, 120/277VAC

C3R
(trimless)

Certifications

5 year limited warranty
AMERLUX LED

Fixture Summary

Fixture Type

# of Heads	New Construction	Remodeler	Trim	Trimless
1	Yes	No	Yes	Yes
2	Yes	No	Yes	Yes
3	Yes	No	Yes	Yes

See seperate spec sheet for Semi-Recessed version.

Performance Data

Watts	Delivered Lumens	LPW	CBCP	Color Temp-CRI
16	1,700	106.3	6,921	3000K-83
19	2,018	119.3	8,332	3000K-83
23	2,440	106.1	9,934	3000K-83
27	2,880	106.7	11,726	3000K-83
31	3306	100.4	13,460	3000K-83

Data is based on 3000K-83 120V IES files available on website.
Data is "per head" and based on Flood Optic. See pg 7 for other beam spreads.

Cylindrix® III

Recessed Multiples

amerlux

PROJECT:	TYPE:

Ordering Information - Frame

C3R/SR-NC-FRAME . _____ . _____ . _____ . _____ . _____

1 2 3 4 5 6

1	Model
	C3R/SR-NC-FRAME *(new construction)*

2	Style
	T trimmed
	TL trimless

3	# of Heads
	1
	2
	3

4	Voltage
	120
	277

5	Driver *(for non-dimming select LE/TE otpion)*
	LE/TE TRIAC/ELV dimming, 5% dim
	HILUME-H-ECO Lutron LDE1 Hi-lume® 1% dim Soft-On/Fade-to-Black
	0-10V 0-10V dimming, 1% dim
	DALI EldoLED, 1% dim

6	Options/Accessories
	EM* emergency battery pack, available on 2, 3 or 4 light - powers only 1 head of the total fixure
	**** If this option is selected, you must also select EM option in the Trim Ordering section.***
	HB49 - hanger bars from min 29" to max 49"
	Note: 14 ½" - 25" hanger bars are included as standard.
	Choose HB49 option above for larger mounting spaces only.

Ordering Information - Trim

C3R-NC-TRIM . _____ . _____ . _____ . _____ . 120-277 . _____ . _____ . _____ . _____

1 2 3 4 5 6 7 8 9 10

1	Model
	C3R-NC-TRIM *(new construction)*

2	Style
	T trimmed
	TL trimless

3	# of Heads
	1
	2
	3

4	Wattage
	16
	19
	23
	27
	31

5	Finish *(for housing, head & trim)*
	WT white texture
	BT black texture
	ST silver texture
	Other finishes, consult factory.

6	Voltage
	120-277

7	Beam Spread			
	1LT	2LT	3LT	
	NSP*	**NSP***	**NSP***	*(narrow spot, 10°)*
	SP	**SP**	**SP**	*(spot, 15°)*
	FL	**FL**	**FL**	*(flood 25°)*
	WF	**WF**	**WF**	*(wide flood 40°)*
	LS	**LS**	**LS**	*(linear spread 60°x10°)*
	**** Based on availability, lead times may vary, consult factory.***			

8	Color Temp			
	83 CRI	90+ CRI		
	27 2700K-83	**279** 2700K-90+	**SA27** Signature Ambiance 2700K-90+	**3CLA†** 3000K Class A
	30 3000K-83	**309** 3000K-90+	**SA30** Signature Ambiance 3000K-90+	
	35 3500K-83	**359** 3500K-90+	**SW30** Signature White 3000K-90+	
	40 4000K-83	**409** 4000K-90+	**SC30** Signature Color 3000K-90+	

9	Driver *(for non-dimming select LE/TE otpion)*
	LE/TE TRIAC/ELV dimming, 5% dim
	HILUME-H-ECO Lutron LDE1 Hi-lume® 1% dim Soft-On/Fade-to-Black
	0-10V 0-10V dimming, 1% dim
	DALI EldoLED, 1% dim

10	Options/Accessories
	(standard front door accepts up to 1 accessory)
	SN34 snoot 3/4" length, exterior finish matches fixture finish, accepts up to 2 accessories
	SN15 snoot 1-1/2" length, exterior finish matches fixture finish, accepts up to 2 accessories
	HEX hexcell louver
	CB cross blade, matte black finish *(requires snoot)*
	CL clear glass lens
	SOL solite beam softening lens
	EM* emergency battery pack, available on 2, 3 or 4 light - powers only 1 head of the total fixure
	**** If this option is selected, you must also select EM option in the Frame Ordering section.***

Cylindrix® III

Recessed Multiples

amerlux

PROJECT:	TYPE:

Specifications

Application

Retail and commercial accent and display lighting

Construction

Formed steel mounting frame with integral mounting bars
Thermally protected *(adds 2W to total fixture wattage)*
Steel driver housing
Steel upper housing and laser cut trim ring
Steel plaster frame *(trimless only)*
Complete die-cast optical head construction
Passive cooled

Optical

Tilt: 0-45°x45° *(Trimmed)*, 0-25°x45° *(Trimless)*
Rotation: 360°+
Beam Spreads: Narrow Spot, 10°; Spot, 15°; Flood, 25°; Wide Flood, 40°; Linear Spread Lens, 60° x 10°

LED

Color Temp Options: 2700K, 3000K, 3500K, 4000K, CRISP, Class A Signature Ambiance, White, and Color options available *(see below)*
CRI: 83 typ. or 90+ typ.
Class A* LEDs available
R9 Values: 11 *(83 CRI)*, 55 *(90+ CRI)*
Binning: 3 MacAdam *(SDCM)*
Life: 50,000+ hrs, > 70% of initial lumens at 50,000 hrs

** **Class A LED:** Class A LED's have a CRI > 80 and a GAI > 80. CRI defines color "Naturalness" and GAI defines color "Saturation." Both being high delivers rich colors and pure whites.*

***Signature Ambiance** (2700K & 3000K): A refined, warm light recipe ideal for hospitality, residential-style commercial spaces, and retail. It accentuates woods, textiles, bronze, and darker finishes, creating a relaxed and inviting luxury environment.*

***Signature White** (3000K): A premium white option built for crisp displays, clean architectural finishes, and retail settings. It enhances white surfaces and visual clarity, ensuring whites read brighter without sacrificing refinement.*

***Signature Color** (3000K): A vibrant, color-enhancing option designed for spaces where merchandise, fabrics, and finishes need to stand out. It heightens the contrast between colors and whites, delivering deeper, richer presentations for dynamic retail and hospitality experiences.*

Electrical

Wattage: 16, 19, 23, 27, 31
Electronic constant current LED driver, 120/277VAC input
This product complies with IEEE C62.41 for surge endurance up to 2.5KV. Amerlux® recommends using additional surge protection with this unit (supplied by others), surge and over voltage damage is not covered under warranty.

Drivers

LE/TE - Leading Edge *(Triac, Forward Phase)* or Trailing Edge *(ELV, Reverse Phase)* autosensing driver dims down to 5% on most dimming systems.
0-10V, Lutron & DALI systems also available
See pages 8-10 for more dimming information

Finish

Powder coat paint
Consult Factory for custom finishes

Mounting

Hanger Bars:
Adjustable hanger bars included *(14 ½" - 25" std.)*
Optional **HB49** - hanger bars from min 29" to max 49" available
Trimmed:
For use in T-Grid or GB ceilings; max ceiling thickness 1"
Trimless:
For use in GB ceilings; max ceiling thickness 5/8"
Consult Factory for thicker ceilings

Certifications

CSA listed to UL standards.
Suitable for damp locations
Indoor use only

Warranty

5 year limited warranty

Emergency Battery Pack *(EM)*

Powers single head of 2, 3 or 4 light multiple at 5.1 watts *(approx. 400 Lm)* for 90 minutes. Not available on 1 light multiple

Cylindrix® III

Recessed Multiples

PROJECT:	TYPE:

Electrical Data

NOTE: System Watts includes an additional 2W for thermal protector power consumption.

1 Light

	1 x 16W		1 x 19W		1 x 23W		1 x 27W		1 x 31W	
Voltage	**System Watts**	**Amps**	**System Watts**	**Amps**	**System Watts**	**Amps**	**System Watts**	**Amps**	**System Watts**	**Amps**
120V	18	0.15	21	0.18	25	0.21	29	0.24	33	0.28
277V	18	0.06	21	0.08	25	0.09	29	0.10	33	0.12

Electronic constant current LED driver

2 Light

	2 x 16W		2 x 19W		2 x 23W		2 x 27W		2 x 31W	
Voltage	**System Watts**	**Amps**	**System Watts**	**Amps**	**System Watts**	**Amps**	**System Watts**	**Amps**	**System Watts**	**Amps**
120V	36	0.30	42	0.35	50	0.42	58	0.48	66	0.55
277V	36	0.13	42	0.15	50	0.18	58	0.21	66	0.24

Electronic constant current LED driver

3 Light

	3 x 16W		3 x 19W		3 x 23W		3 x 27W		3 x 31W	
Voltage	**System Watts**	**Amps**	**System Watts**	**Amps**	**System Watts**	**Amps**	**System Watts**	**Amps**	**System Watts**	**Amps**
120V	54	0.45	63	0.53	75	0.63	87	0.73	99	0.83
277V	54	0.19	63	0.23	75	0.27	87	0.31	99	0.36

Electronic constant current LED driver

Accessories

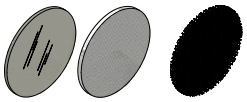

Clear lens, Solite lens, Hexcell louver (fits in front door)

Snoot, ¾" deep

Snoot, 1 ½" deep

Linear spread lens, Hexcell louver, Cross blade (requires snoot)

Cylindrix® III

Recessed Multiples

amerlux

PROJECT:	TYPE:

Product Details - Recessed Trimmed

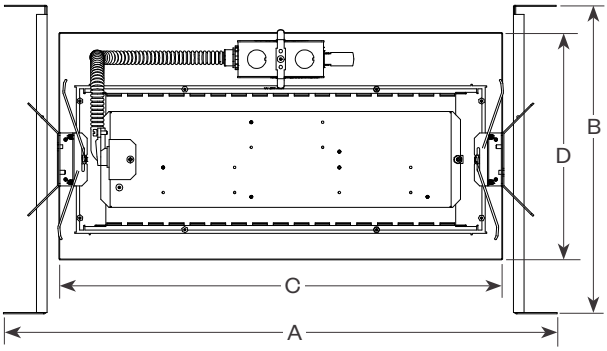

	1 Light	2 Light	3 Light
A	13 3/4"	20 1/4"	25 15/16"
B	14 1/2" max 25"	14 1/2" max 25"	14 1/2" max 25"
C	8 9/16"	15 1/16"	20 13/16"
D	10 11/16"	10 11/16"	10 11/16"

Ceiling cut out: 1 Light - 7 1/8" x 7 1/8"
2 Light - 7 1/8" x 13 5/8"
3 Light - 7 1/8" x 19 5/16"

End View

Standard Driver (ELV/TRIAC)

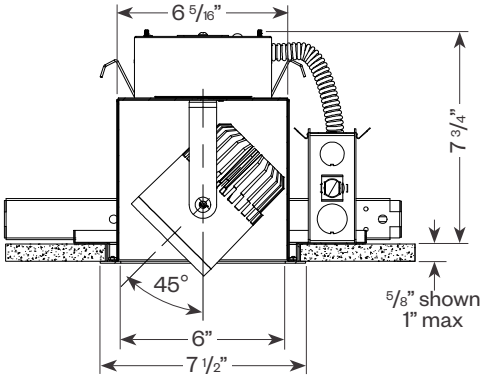

Hi-lume®/0-10V/DALI Driver

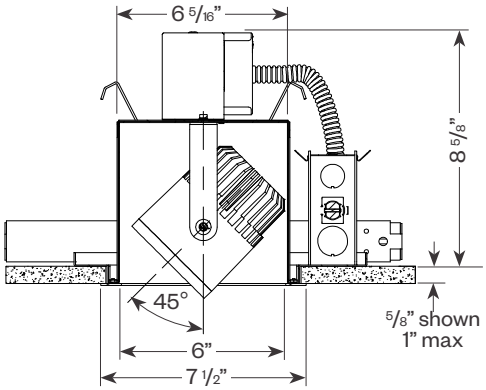

Side View

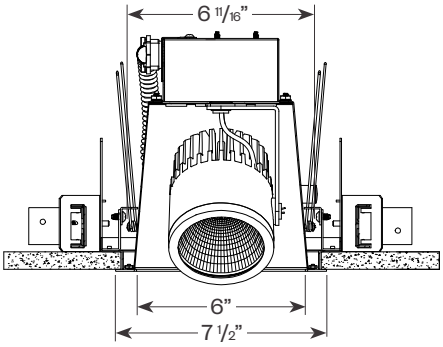

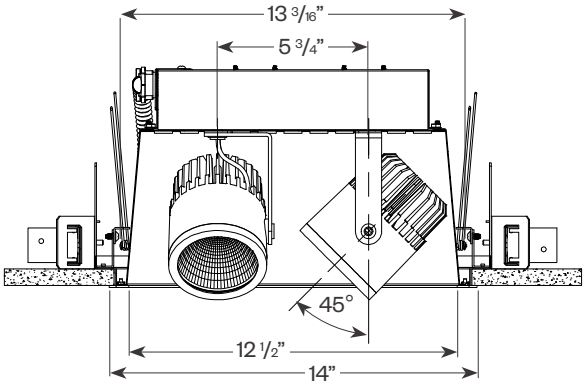

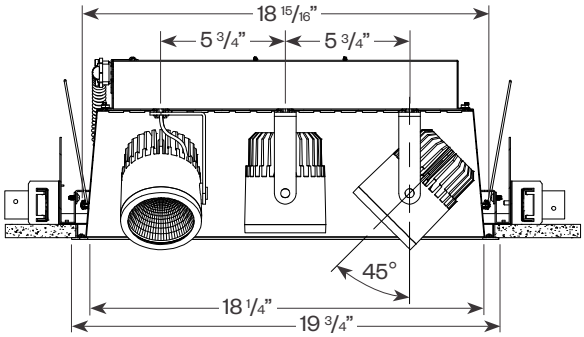

Cylindrix® III

Recessed Multiples

amerlux

PROJECT:	TYPE:

Product Details - Recessed Trimless

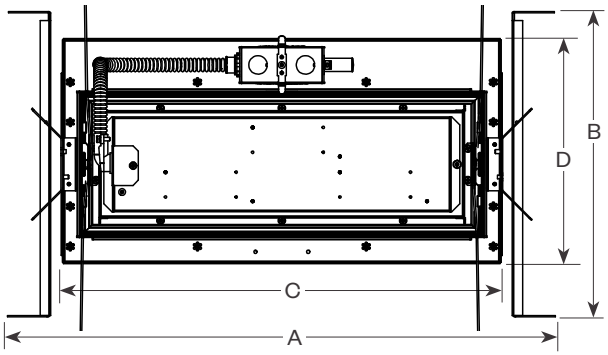

	1 Light	2 Light	3 Light
A	13 3/4"	20 1/4"	25 15/16"
B	14 1/2" max 25"	14 1/2" max 25"	14 1/2" max 25"
C	8 9/16"	15 1/16"	20 13/16"
D	10 11/16"	10 11/16"	10 11/16"

Ceiling cut out: 1 Light - 7 1/8" x 7 1/8"
2 Light - 7 1/8" x 13 5/8"
3 Light - 7 1/8" x 19 5/16"

End View

Standard Driver (ELV/TRIAC)

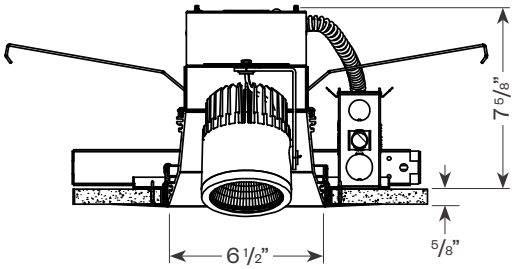

Hi-lume®/0-10V/DALI Driver

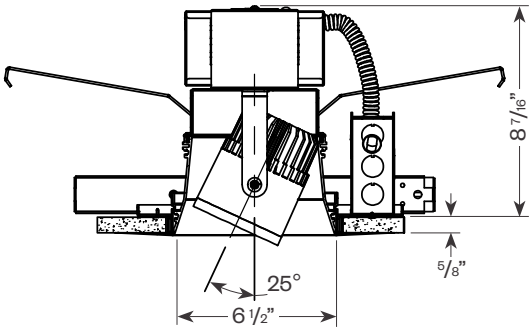

Side View

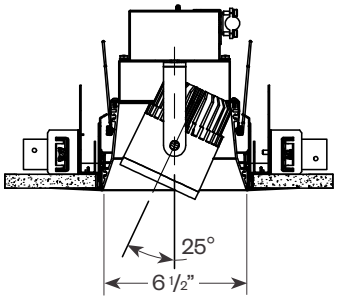

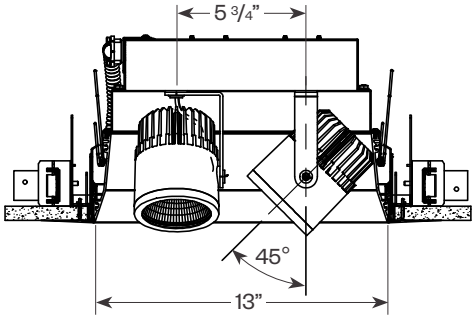

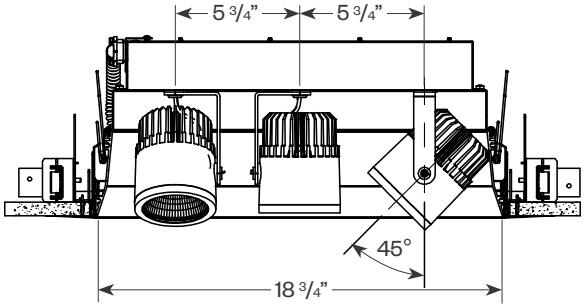

Plaster Frame Installation Detail *(for trimless fixture only)*

1. Recessed extruded housing
2. Aperture plate
3. Ceiling 5/8"
4. Drywall screw *(by others)*
5. Plaster frame
6. Plaster skim coat *(by others)*

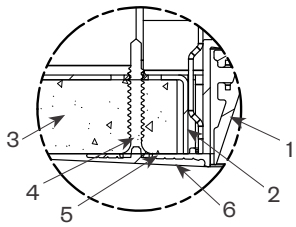

Cylindrix® III

Recessed Multiples

amerlux

PROJECT: **TYPE:**

Performance Data *(per head)*

Multiplying Factors: *(Multiplying Factor is based on 3000K-83 120V IES file on website)*

CCT:	2700K-83	3000K-83	3500K-83	4000K-83
Factor:	0.96	1.0	1.02	1.04

Wattage:	16W	19W	23W	27W	31W
Factor:	0.51	0.61	0.74	0.87	1.0

CCT:	2700K-90+	3000K-90+	3500K-90+	4000K-90+	3CLA
Factor:	0.83	0.86	0.90	0.93	0.70

31W LED, 3000K-83

Narrow Spot (NSP), 10°
LTL #11906314.01A
Lumens: 2,426

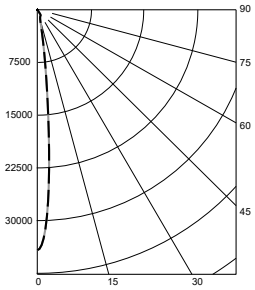

Candelas at Nadir

Deg	Candela
0	34180
5	17580
15	1541
25	979
35	195
45	18

Spot (SP), 15°
LTL # 13609366.09
Lumens: 3264

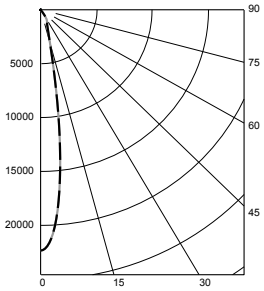

Candelas at Nadir

Deg	Candela
0	22340
5	17770
15	3015
25	1305
35	383
45	27

Flood (FL), 25°
LTL # 13609366.10
Lumens: 3306

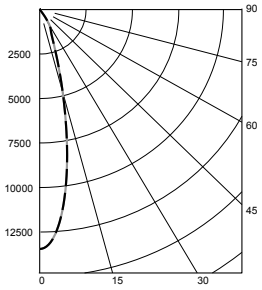

Candelas at Nadir

Deg	Candela
0	13460
5	11970
15	4475
25	1407
35	378
45	28

Wide Flood (WF), 40°
LTL # 13609366.11
Lumens: 3257

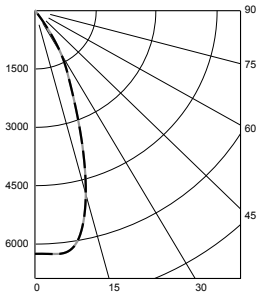

Candelas at Nadir

Deg	Candela
0	6252
5	6280
15	4839
25	2030
35	442
45	33

Application Data *(per head)*

Notes and Definitions:

Beam spread is to 50% center beam candlepower *(CBCP)*.
D=Distance to floor or wall.
FC=Footcandles on floor or wall at center beam aiming location.
L=Effective Visual Beam length in feet *(50% of maximum footcandle level)*.
W=Effective Visual Beam width in feet *(50% of maximum footcandle level)*.
CB=Distance across or down to center beam location.

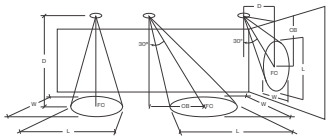

0° Aiming Angle Horizontal Footcandles

	D	FC	L	W
NARROW SPOT	5.0'	1367	1.1	1.1
	7.5'	608	1.3	1.3
	10.0'	342	1.7	1.7
	12.5'	219	2.3	2.3
SPOT	5.0'	894	1.3	1.3
	7.5'	398	2.2	2.2
	10.0'	224	2.9	2.9
	12.5'	144	3.6	3.6
FLOOD	5.0'	539	2.0	2.0
	7.5'	240	3.1	3.1
	10.0'	135	4.0	4.0
	12.5'	87	5.1	5.1
WIDE FLOOD	5.0'	284	3.3	3.3
	7.5'	121	5.0	5.0
	10.0'	67	6.6	6.6
	12.5'	43	8.3	8.3

30° Aiming Angle Horizontal Footcandles

	D	FC	L	W	CB
NARROW SPOT	5.0'	839	1.3	1.1	3.0
	7.5'	384	1.9	1.4	4.0
	10.0'	211	2.5	2.1	6.0
	12.5'	143	3.0	2.7	7.0
SPOT	5.0'	559	2.1	1.5	3.0
	7.5'	265	2.8	2.5	4.0
	10.0'	145	3.9	3.3	5.0
	12.5'	95	4.7	4.2	7.0
FLOOD	5.0'	338	2.8	2.5	3.0
	7.5'	162	3.8	3.5	4.0
	10.0'	92	5.1	4.5	5.0
	12.5'	58	6.5	5.7	6.0
WIDE FLOOD	5.0'	222	3.6	3.2	2.0
	7.5'	95	5.4	5.1	3.0
	10.0'	53	7.4	6.8	4.0
	12.5'	34	9.2	8.6	5.0

30° Aiming Angle Vertical Footcandles

	D	FC	L	W	CB
NARROW SPOT	3.0'	508	2.0	1.1	5.0
	4.0'	261	2.9	1.4	7.0
	5.0'	186	3.3	1.6	8.0
	6.0'	128	4.0	2.1	10.0
SPOT	3.0'	338	3.1	1.5	5.0
	4.0'	212	3.8	2.0	6.0
	5.0'	132	4.8	2.7	7.0
	6.0'	95	5.6	3.1	9.0
FLOOD	3.0'	259	3.5	2.0	4.0
	4.0'	143	4.6	2.9	5.0
	5.0'	92	5.7	3.5	7.0
	6.0'	65	7.0	4.2	8.0
WIDE FLOOD	3.0'	191	3.2	2.7	3.0
	4.0'	108	4.2	3.6	4.0
	5.0'	69	5.5	4.6	5.0
	6.0'	48	6.5	5.4	6.0

60° Aiming Angle Vertical Footcandles

	D	FC	L	W	CB
NARROW SPOT	3.0'	1553	1.1	1.0	2.0
	4.0'	1131	1.2	1.1	2.0
	5.0'	846	1.2	1.1	3.0
	6.0'	503	2.0	1.3	3.0
SPOT	3.0'	1275	1.4	1.1	2.0
	4.0'	903	1.6	1.2	2.0
	5.0'	561	2.1	1.5	3.0
	6.0'	402	2.3	1.8	3.0
FLOOD	3.0'	814	2.1	1.4	2.0
	4.0'	573	2.1	1.7	2.0
	5.0'	340	2.8	2.5	3.0
	6.0'	255	3.1	2.8	3.0
WIDE FLOOD	3.0'	550	2.3	1.8	1.0
	4.0'	283	3.3	3.1	2.0
	5.0'	201	3.8	3.4	2.0
	6.0'	138	4.6	4.3	2.0

Cylindrix® III

Recessed Multiples

PROJECT:	TYPE:

Dimming Compatibility

Amerlux® Cylindrix® fixtures are compatible with all major dimming protocols prevalent in the United States. Please see below for general compatibilities and wiring diagrams. Amerlux recommends testing your unique dimming configuration as the exact full configuration *(Dimmer, Fixture Quantity, Voltage, etc)* may affect dimming performance.

--- NOTE: INFORMATION BELOW IS FOR WIRED DIMMERS ONLY. FOR WIRELESS DIMMERS, CONSULT FACTORY ---

TRIAC *(Forward Phase)* Dimming

Utilizes standard TRIAC dimmers that are in wide use in installations across the US. Best for retrofit applications where TRIAC dimmers are installed.

Notes:

- 120VAC or 277VAC*
- Dims down to 5% light output *(most cases)*
- Consult Dimming manufacturer for installation instructions - **DO NOT SHARE NEUTRALS!**
- Must meet dimmer Minimum Load Requirements per dimming manufacturer

Compatible Dimmers†:	
Wall Box *(TRIAC 120VAC)*	**Central System**
Lutron "Diva"	Lutron "GP" Panel
Lutron "Nova-T"	Lutron Grafik Eye QS
Lutron "Maestro"	
Lutron "Skylark"	

TRIAC Wiring Diagram

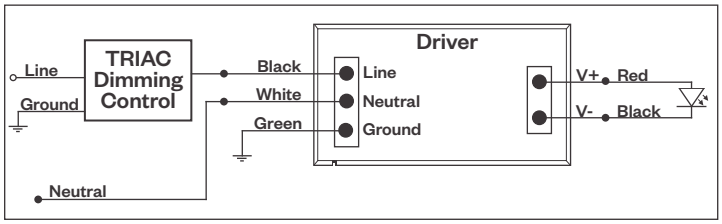

ELV - Electronic Low Voltage *(Reverse Phase)* Dimming

Utilizes specialized "ELV" dimmers.

Notes:

- 120VAC or 277VAC*
- Dims down to 5% light output *(most cases)*
- Consult Dimming manufacturer for installation instructions - **DO NOT SHARE NEUTRALS!**
- Must meet dimmer Minimum Load Requirements per dimming manufacturer

ELV Wiring Diagram

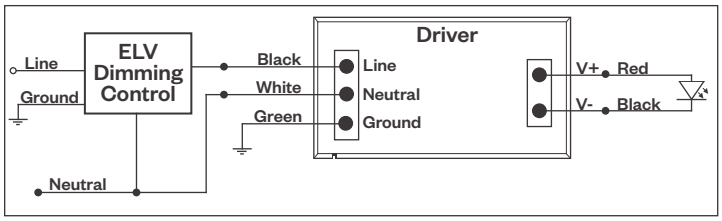

Compatible Dimmers†:		
Wall Box *(ELV 120VAC)*	**Wall Box** *(ELV 277VAC)*	**Central System**
Lutron "Diva"	Leviton Revoir II AWSMT-E	Lutron "GP" Panel with PHPM-PA 120/277VAC
Lutron "Nova-T"		Lutron Grafik Eye QS with PHPM-PA 120/277VAC
Lutron "Maestro"		
Lutron "Skylark"		
Leviton "Surslide"		
Leviton "Vizio"		

Notes:

* Driver is 277VAC dimmable with appropriate dimmer *(by others)*. All provided wiring diagrams show 120VAC wiring colors and method. Please refer to 277VAC dimmer installation instructions for 277VAC wiring diagrams.

† The absence of a dimmer from the lists above does not imply incompatibility. Please consult factory for compatibility inquiries.

Cylindrix® III

Recessed Multiples

PROJECT:	TYPE:

Dimming Compatibility *(continued)*

Amerlux® Cylindrix® fixtures are compatible with all major dimming protocols prevalent in the United States. Please see below for general compatibilities and wiring diagrams. Amerlux recommends testing your unique dimming configuration as the exact full configuration *(Dimmer, Fixture Quantity, Voltage, etc)* may affect dimming performance.

--- NOTE: INFORMATION BELOW IS FOR WIRED DIMMERS ONLY. FOR WIRELESS DIMMERS, CONSULT FACTORY ---

0-10V Dimming

Integrates into a variety of building management and daylighting controls

Notes:

- 120VAC or 277VAC*
- Dims down to 1% light output
- Requires interface to turn off power to driver
- Consult Dimming manufacturer for installation instructions - **DO NOT SHARE NEUTRALS!**

0-10V Wiring Diagram

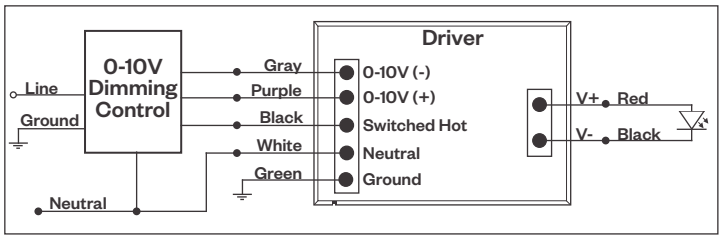

Compatible Dimmers†:		
Wall Box		**Central System**
Lutron "Diva" - DVSTV	Leviton Renoir II 0-10V	Lutron Grafik Eye with GRX-TVI Interface

Lutron LDE1 Dimming

Integrates into Lutron EcoSystem building management

Notes:

- 120VAC or 277VAC*
- Dims down to 1% Soft-On/Fade-to-Black
- EcoSystem Control
- Consult Dimming manufacturer for installation instructions - **DO NOT SHARE NEUTRALS!**

LDE1 *(HILUME-H-ECO)* EcoSystem Digital Control Wiring Diagram

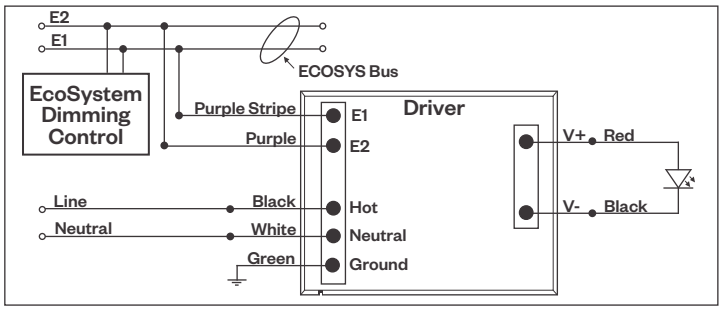

Compatible Dimmers†:	
Lutron ECO System	**Central System**
Pow Pak Dimming Modules	Lutron EcoSystem compatible controls
Energi Savr Node	
Grafik Eye QS/Homeworks	
QS Control Unit	
Quantum Hub	
Homeworks QS/My Room	

DALI Dimming

Digital control protocol allows individual fixture control

Notes:

- 120VAC - 277VAC*
- Dims down to 1% light output in most cases

DALI Wiring Diagram

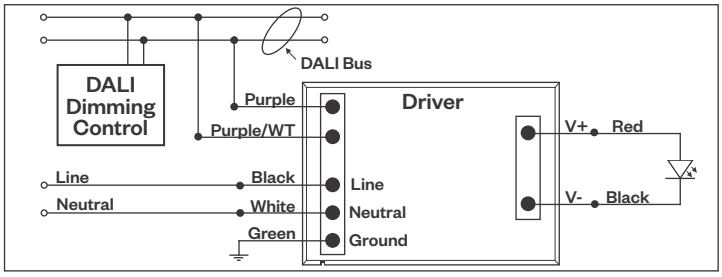

Compatible Dimmers†:	
Wall Box *(3-Wire Fluorescent)*	**Central System**
Leviton CD250 Controller	Dynalite
	Fifth Light

Notes:

* Driver is 277VAC dimmable with appropriate dimmer *(by others)*. All provided wiring diagrams show 120VAC wiring colors and method. Please refer to 277VAC dimmer installation instructions for 277VAC wiring diagrams.

† The absence of a dimmer from the lists above does not imply incompatibility. Please consult factory for compatibility inquiries.

Cylindrix® III

Recessed Multiples

PROJECT:	TYPE:

Emergency Dimming
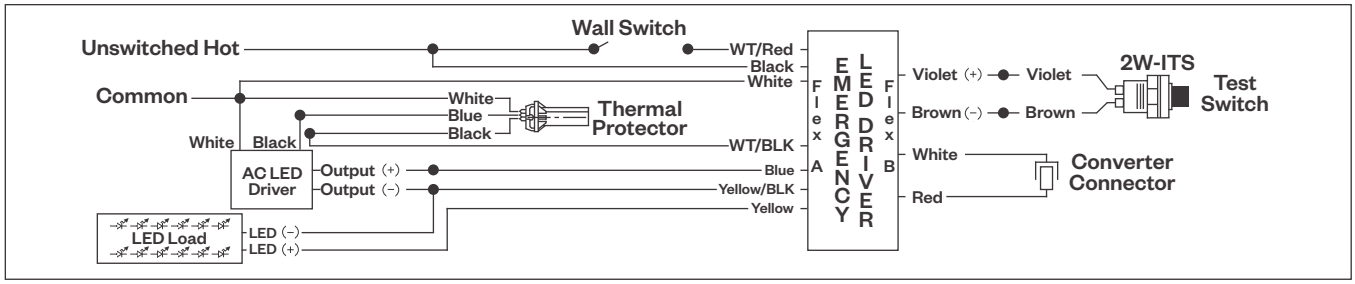
Wiring Diagram