Austin Series

PROJECT:	TYPE:

Features

Aluminum light poles with a decorative base, featuring a choice of extruded shafts. Accepts a wide variety of Amerlux post top luminaires.

11" diameter cast aluminum decorative base.

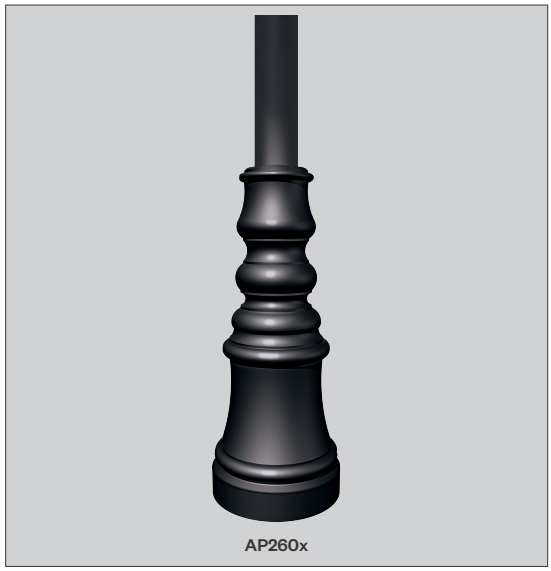

Product Overview

Type:	Exterior Lighting Pole for Amerlux Post Top Luminaires
Pole Height:	8', 10', 12', 14', 16'
Shaft Size:	4" to 3" OD, 4" OD

Certifications

POWDER COATED TOUGH™

Fixture Summary

Choice of Extruded Shafts:
- 4" to 3" OD smooth tapered, 0.125 wall
- 4" OD fluted *(12 flutes)*, 0.125 wall
- 4" OD smooth round, 0.125 wall

Access door for anchor bolts and wiring is secured with stainless steel screws.

Ground lug provided inside base.

Materials:
Base - Cast aluminum *(356-T6)*
Shaft - Extruded aluminum *(6063-T6)*
- Tapered aluminum *(6063-T6)*
Tenon - 3" OD Cast aluminum *(356-T6)*
Anchor Bolts - Hot dipped galvanized steel, ordered separately

Finish:
Premium quality thermoset polyester powdercoat for a durable finish.

Options/Accessories:
- Single or double sided field rotatable banner arms
- Flag pole holder
- GFCI - covered ground fault circuit protected duplex outlet
- Direct burial extension

Austin Series

amerlux

PROJECT:	TYPE:

Ordering Information - Pole

_____.____.____.____

1 2 3 4

1	Model
	AP2602 4" to 3" O.D. smooth tapered pole, 0.125 wall
	AP2603 4" O.D. fluted pole, 0.125 wall
	AP2604 4" O.D. smooth pole, 0.125 wall

2	Pole Height
	08 8'-0"
	10 10'-0"
	12 12'-0"
	14 14'-0"
	16 16'-0"

3	Finsh
	BLK satin black
	CLB classic bronze
	GBZ gloss textured bronze
	GRN green
	GTB gloss textured black
	TBK textured black
	TGR gloss textured green
	CSTM custom, consult factory

4	Options
	GFCI-TOP* ground fault circuit protected outlet, placed 6" from the top of pole
	GFCI-BTM ground fault circuit protected outlet, placed 6" above the decorative base at the bottom of pole
	LT* less tenon
	DB direct burial extension

**** Not available for use with 4" to 3" tapered pole.***

Ordering Information - Anchor Bolt *(ordered separately, can be pre-shipped upon request)*

AP2600-555-0018

1

1	Model
	AP2600-555-0018 3/4" x 17" anchor bolt *(4 included)*

Ordering Information - Accessories *(ordered separately)*

_____.____

1 2

1	Model *(all accessories below are for non-tapered shafts only)*
	BA18-FRC4 18" banner arm, 4" OD shaft
	BA24-FRC4 24" banner arm, 4" OD shaft
	2BA18-FRC4-180 double sided 18" banner arms, 4" OD shaft
	2BA24-FRC4-180 double sided 24" banner arms, 4" OD shaft
	FPH-4 flag pole holder for 4" non-tapered poles

2	Finsh
	BLK satin black
	CLB classic bronze
	GBZ gloss textured bronze
	GRN green
	GTB gloss textured black
	TBK textured black
	TGR gloss textured green
	CSTM custom, consult factory

Austin Series

PROJECT:	TYPE:

Product Details

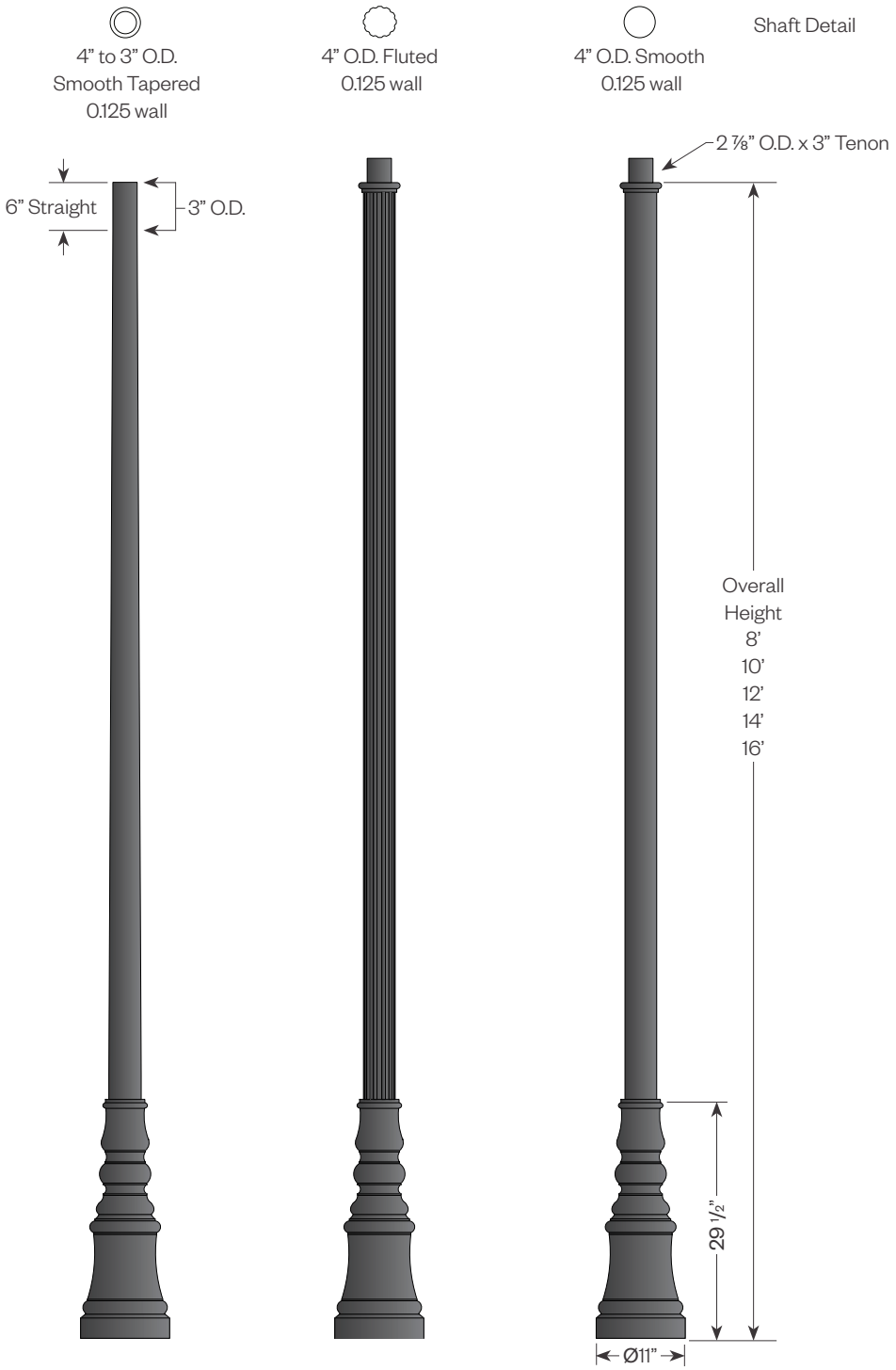

AP2602.XX **AP2603.XX** **AP2604.XX**

Austin Series

amerlux

PROJECT: **TYPE:**

Product Details *(continued)*

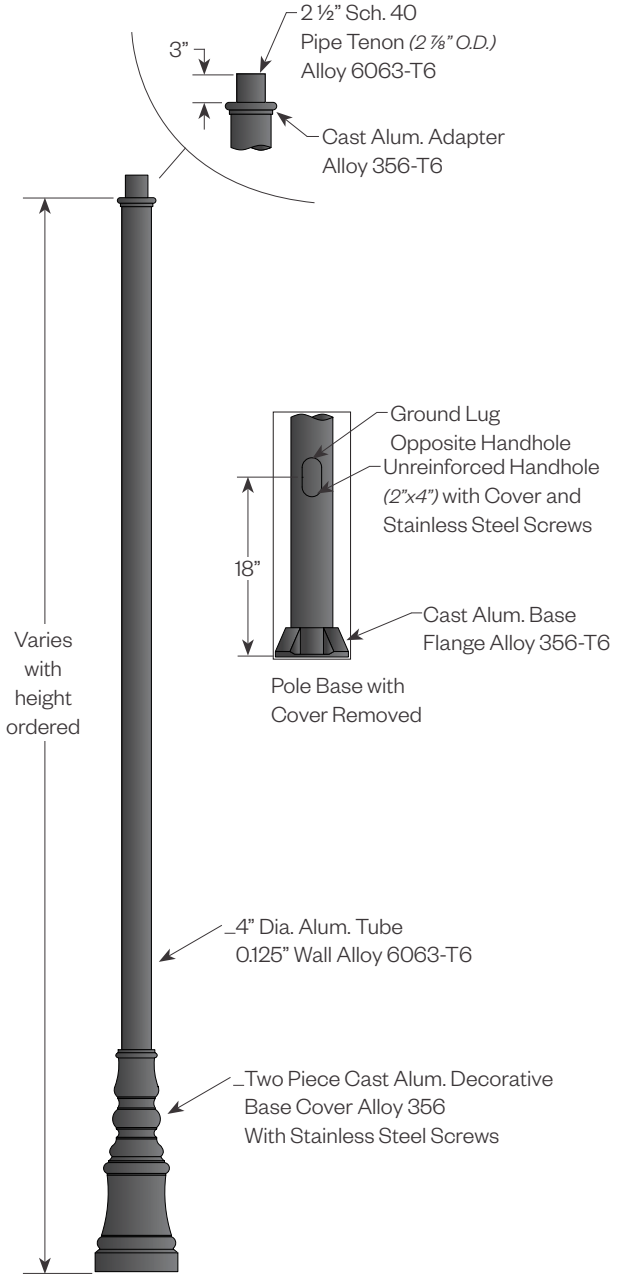

Finish

The post will be finished with an electrostatically applied thermoset polyester powder coat. Prior to finishing, the parts are thoroughly cleaned. Our powder coat finish is durable, long lasting, attractive and scratch resistant as well as environmentally friendly. We offer 7 stock finishes or hundreds of special order colors including custom matching for existing projects *(additional charges apply)*.

BLK - Satin Black
CLB - Classic Bronze
GBZ - Gloss Textured Bronze
GRN - Green
GTB - Gloss Textured Black
TBK - Textured Black
TGR - Gloss Textured Green

Options/Accessories

Banner Arms
Single or double sided field rotatable banner arms.
BA18 *(18")* or **BA24** *(24")* banner arms
FRC4 *(4"OD shaft)*
Add a *(2)* for a double arm. Example: **2BA18-FRC4-180**
See ordering guide for configurations

FPH-4
Extruded aluminum holder for 1" OD flag poles.
Available for 4" OD non-tapered pole.

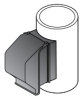

GFCI - Top/Bottom
Covered ground fault circuit protected duplex outlet.
Can be placed near top of pole or above the decorative base at the bottom of the pole. Wet while in use rated.

Direct Burial

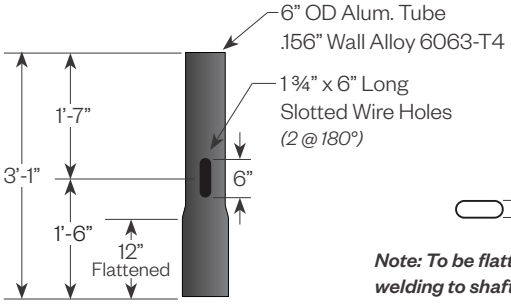

Note: To be flattened after welding to shaft assembly.

GFCI Orientation Guide

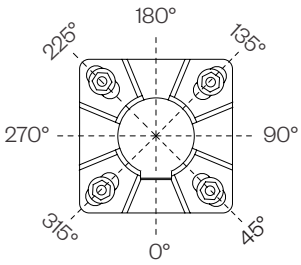

Notes: 1. GFCI placed at 0° unless otherwise specified.
2. Orientation of additional accessories must be specified when ordering.

As viewed from above.

Anchor Details

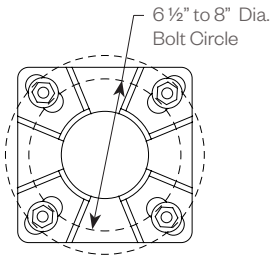

Anchor bolts and templates can be requested prior to product shipment.

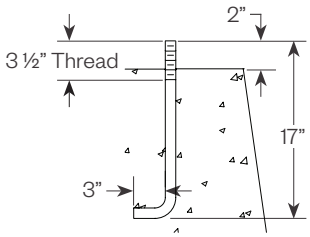

(4) ¾"-10NC Galv. Stl. Anchor Bolts, AASHTO M314-90 Grade 55, Galv. Per ASTM A153.
(4) ¾"-10NC Galv. Stl. Hex. Nuts
(4) ¾" Galv. Stl. Lockwashers
(4) ¾" Galv. Stl. Flatwashers