Cylindrix® III Mini

Semi-Recessed Multiples

PROJECT: **TYPE:**

Features

This powerful, compact member of our Cylindrix family enhances your design aesthetics. The new Cylindrix III Mini Multiples consist of tiny, passively cooled LED heads, with full dimming capacity. They deliver brilliant colors and crispest whites, utilizing a patent pending, field changeable optical system. Available in 1, 2, 3 or 4 light configurations.

C3MSR

Product Overview

Type:	Semi-Recessed Multiple, Accent & Display
Wattage:	15W, 18W*, 21W *(*VNSP only)*
Color Temp:	2200K, 2700K, 3000K, 3500K, 4000K Signature LED options in 2700K & 3000K
CRI:	83 typ. *(2700K, 3000K, 3500K, 4000K)* 90+ typ. *(2200K, 2700K, 3000K, 3500K, 4000K)* 3K Class A LEDs available
Dimming:	TRIAC & ELV, 5% Dim, 120/277VAC Lutron LDE1 Hi-lume® 1% Dim Soft-On/Fade-to-Black, 120/277VAC 0-10V, 1% Dim, 120/277VAC DALI, 1% Dim, 120/277VAC

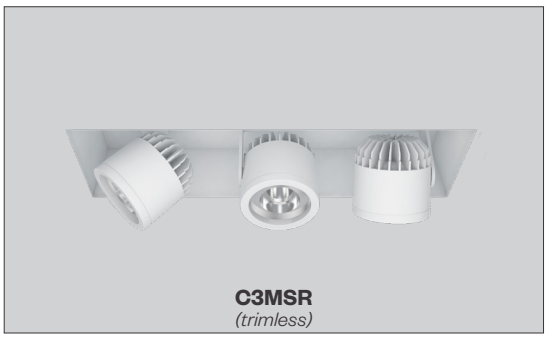

C3MSR
(trimless)

Certifications

5 year limited warranty
AMERLUX LED

Fixture Summary

Fixture Type

# of Heads	New Construction	Remodeler	Trim	Trimless
1	Yes	No	Yes	Yes
2	Yes	No	Yes	Yes
3	Yes	No	Yes	Yes
4	Yes	No	Yes	Yes

See separate spec sheet for Semi-Recessed or Remodeler versions.

Performance Data

Watts	Delivered Lumens	LPW	CBCP	Color Temp-CRI
15	1508	100.5	9,415	3000K-83
18*	1096	60.2	24,308	3000K-83
21	2125	105	13,206	3000K-83

** Note: 18W is VNSP only*

Data is based on 3000K-83 120V IES files available on website.
15W & 21W data is based on Very Narrow Flood optics. 18W data is Very Narrow Spot optic only.
See pg 10-11 for other beam spreads.

Cylindrix® III Mini

Semi-Recessed Multiples

amerlux

PROJECT:	TYPE:

Ordering Information - Frame

_____ . ____ . ____ . _____ . _____ . _____

1 2 3 4 5 6

1	Model
	C3MR/SR-NC-FRAME *(new construction)*
	C3MR/SR-CP-FRAME *(Chicago Plenum)*

2	Style
	T trimmed
	TL trimless

3	# of Heads
	1
	2
	3
	4

4	Voltage
	120
	277

5	Driver *(for non-dimming select LE/TE otpion)*
	LE/TE TRIAC/ELV dimming, 5% dim
	HILUME-H-ECO Lutron LDE1 Hi-lume® 1% dim Soft-On/Fade-to-Black
	0-10V 0-10V dimming, 1% dim
	DALI EldoLED, 1% dim

6	Options/Accessories
	EM* emergency battery pack, available on 2, 3 or 4 light - powers only 1 head of the total fixure
	**** If this option is selected, you must also select EM option in the Trim Ordering section.***
	HB49 - hanger bars from min 29" to max 49"
	Note: 14 ½" - 25" hanger bars are included as standard. Choose HB49 option above for larger mounting spaces only.

Ordering Information - Trim

_____ . ____ . ____ . ____ . ____ . 120-277 . _____ . _____ . _____ . _____

1 2 3 4 5 6 7 8 9 10

1	Model
	C3MSR-NC-TRIM *(new construction)*
	C3MSR-CP-TRIM *(Chicago Plenum)*

2	Style
	T trimmed
	TL trimless

3	# of Heads
	1
	2
	3
	4

4	Wattage
	15
	18 *(VNSP only)*
	21

5	Finish *(for housing, head & trim)*
	WT white texture
	BT black texture
	ST silver texture
	Other finishes, consult factory.

6	Voltage
	120-277

7	Beam Spread				
	1LT	2LT	3LT	4LT	
	VNSP	**VNSP**	**VNSP**	**VNSP**	*(very narrow spot 8°, 18W only)*
	SP	**SP**	**SP**	**SP**	*(spot 14°)*
	VNF	**VNF**	**VNF**	**VNF**	*(very narrow flood 18°)*
	NF	**NF**	**NF**	**NF**	*(narrow flood 23°)*
	FL	**FL**	**FL**	**FL**	*(flood 34°)*
	WF	**WF**	**WF**	**WF**	*(wide flood 44°)*
	LS	**LS**	**LS**	**LS**	*(linear spread 60°x10°)*

8	Color Temp			
	83 CRI	90+ CRI		
	27 2700K-83	**229†** 2200K-90+	**SA27†** Signature Ambiance 2700K-90+	**3CLA†** 3000K Class A
	30 3000K-83	**279** 2700K-90+	**SA30†** Signature Ambiance 3000K-90+	
	35 3500K-83	**309** 3000K-90+	**SW30†** Signature White 3000K-90+	
	40 4000K-83	**359** 3500K-90+	**SC30†** Signature Color 3000K-90+	
		409 4000K-90+		
	† Not available for use with 18W VNSP.			

9	Driver *(for non-dimming select LE/TE otpion)*
	LE/TE TRIAC/ELV dimming, 5% dim
	HILUME-H-ECO Lutron LDE1 Hi-lume® 1% dim Soft-On/Fade-to-Black
	0-10V 0-10V dimming; 1% dim
	DALI EldoLED; 1% dim

10	Options
	(standard front door accepts up to 2 accessories)
	SN snoot, 1" length, matte black interior, exterior finish matches fixture finish *(accepts up to 2 accessories + cross blade)*
	HEX hexcell louver
	CB cross blade, matte black finish *(requires snoot)*
	SOL solite beam softening lens
	EM* emergency battery pack, available on 2, 3 or 4 light - powers only 1 head of the total fixure
	**** If this option is selected, you must also select EM option in the Frame Ordering section.***

Cylindrix® III Mini

Semi-Recessed Multiples

PROJECT:	TYPE:

Specifications

Application

Retail and commercial accent and display lighting

Construction

Stamped steel mounting frame with integral mounting bars
Thermally protected *(adds 2W to total fixture wattage)*
Steel driver housing
Steel upper housing and laser cut trim ring
Steel plaster frame *(trimless only)*
Complete die-cast optical head construction

Optical

Tilt: 0-40°x40° *(Trimmed)*, 0-45°x45° *(Trimless)*
Rotation: 360°+
Beam Spreads: Very Narrow Spot, 8° *(18W only)*; Spot, 14°; Very Narrow Flood, 18°; Narrow Flood, 23°; Flood, 34°; Wide Flood, 44°

LED

Color Temp Options: 2200K, 2700K, 3000K, 3500K, 4000K
Signature Ambiance, White, and Color options available *(see below)*
CRI: 83 typ. *(2700K, 3000K, 3500K, 4000K)*
90+ typ. *(2200K, 2700K, 3000K, 3500K, 4000K)*
Class A* LEDs available
R9 Values: 11 *(83 CRI)*, 55 *(90+ CRI)*
Binning: 3 MacAdam *(SDCM)*
Life: 50,000+ hrs, > 70% of initial lumens at 50,000 hrs

** **Class A LED:** Class A LED's have a CRI > 80 and a GAI > 80. CRI defines color "Naturalness" and GAI defines color "Saturation." Both being high delivers rich colors and pure whites.*

***Signature Ambiance** (2700K & 3000K): A refined, warm light recipe ideal for hospitality, residential-style commercial spaces, and retail. It accentuates woods, textiles, bronze, and darker finishes, creating a relaxed and inviting luxury environment.*

***Signature White** (3000K): A premium white option built for crisp displays, clean architectural finishes, and retail settings. It enhances white surfaces and visual clarity, ensuring whites read brighter without sacrificing refinement.*

***Signature Color** (3000K): A vibrant, color-enhancing option designed for spaces where merchandise, fabrics, and finishes need to stand out. It heightens the contrast between colors and whites, delivering deeper, richer presentations for dynamic retail and hospitality experiences.*

Electrical

Wattage: 15W, 18W, 21W
Electronic constant current LED driver, 120/277VAC input
This product complies with IEEE C62.41 for surge endurance up to 2.5KV. Amerlux® recommends using additional surge protection with this unit (supplied by others), surge and over voltage damage is not covered under warranty.

Drivers

LE/TE - Leading Edge *(Triac, Forward Phase)* or Trailing Edge *(ELV, Reverse Phase)* autosensing driver dims down to 5% on most dimming systems.
0-10V, Lutron and DALI systems also available
See pages 12-14 for more dimming information

Finish

Powder coat paint
Consult Factory for custom finishes

Mounting

Hanger Bars:
Adjustable hanger bars included *(14 ½" - 25" std.)*
Optional **HB49** - hanger bars from min 29" to max 49" available
Trimmed:
For use in T-Grid or GB ceilings; max ceiling thickness 1"
Trimless:
For use in GB ceilings; max ceiling thickness 5/8"
Consult Factory for thicker ceilings

Certifications

CSA listed to UL standards. Suitable for damp locations
Indoor use only

Warranty

5 year limited warranty

Emergency Battery Pack *(EM)*

Powers single head of 2, 3 or 4 light multiple at 5.1 watts *(approx. 400 Lm)* for 90 minutes. Not available on 1 light multiple. And not available for use with CP model.

Cylindrix® III Mini

Semi-Recessed Multiples

PROJECT:	TYPE:

Electrical Data

NOTE: System Watts includes an additional 2W for thermal protector power consumption.

1 Light

	1 x 15W		1 x 18W		1 x 21W	
Voltage	System Watts	Amps	SystemWatts	Amps	System Watts	Amps
120V	17	0.14	20	0.17	23	0.19
277V	17	0.06	20	0.07	23	0.08

Electronic constant current LED driver.

2 Light

	2 x 15W		2 x 18W		2 x 21W	
Voltage	System Watts	Amps	SystemWatts	Amps	System Watts	Amps
120V	34	0.28	40	0.33	46	0.38
277V	34	0.12	40	0.14	46	0.17

Electronic constant current LED driver.

3 Light

	3 x 15W		3 x 18W		3 x 21W	
Voltage	System Watts	Amps	SystemWatts	Amps	System Watts	Amps
120V	51	0.43	60	0.5	69	0.58
277V	51	0.18	60	0.22	69	0.25

Electronic constant current LED driver.

4 Light

	4 x 15W		4 x 18W		4 x 21W	
Voltage	System Watts	Amps	SystemWatts	Amps	System Watts	Amps
120V	68	0.57	80	0.67	92	0.77
277V	68	0.25	80	0.29	92	0.33

Electronic constant current LED driver.

Accessories *(diagrams show installation order)*

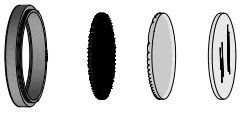

Front door/Accessory holder, hexcell, linear spread lens, solite lens

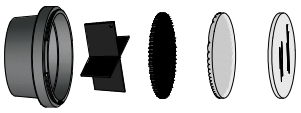

Snoot accessory holder, cross blade, hexcell, linear spread lens, solite lens

Plaster Frame Installation Detail *(for trimless fixture only)*

1. Recessed extruded housing
2. Aperture plate
3. Ceiling ⅝"
4. Drywall screw *(by others)*
5. Plaster frame
6. Plaster skim coat *(by others)*

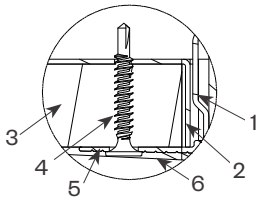

Cylindrix® III Mini

Semi-Recessed Multiples

PROJECT: **TYPE:**

Product Details - Semi-Recessed Trimmed with ELV/TRIAC Driver

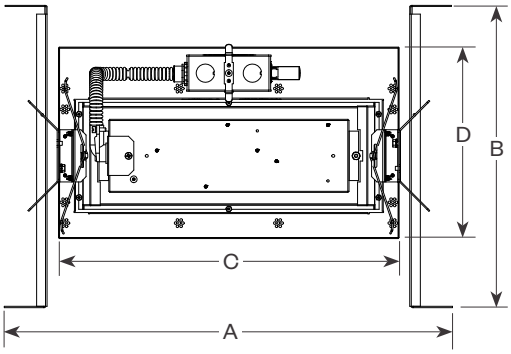

	1 Light	2 Light	3 Light	4 Light
A	12 1/8"	17"	21 1/2"	26"
B	14 1/2" max 25"	14 1/2" max 25"	14 1/2" max 25"	14 1/2" max 25"
C	7 1/16"	11 13/16"	16 5/16"	20 13/16"
D	9 1/8"	9 1/8"	9 1/8"	9 1/8"

Ceiling Cut Out: 1 Light - 5 9/16" x 5 9/16"
2 Light - 5 9/16" x 10 5/16"
3 Light - 5 9/16" x 14 13/16"
4 Light - 5 9/16" x 19 5/16"

End View

Standard Driver ***(ELV/TRIAC)***

1 Light

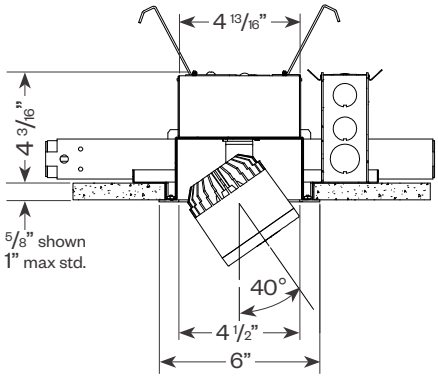

2-4 Light

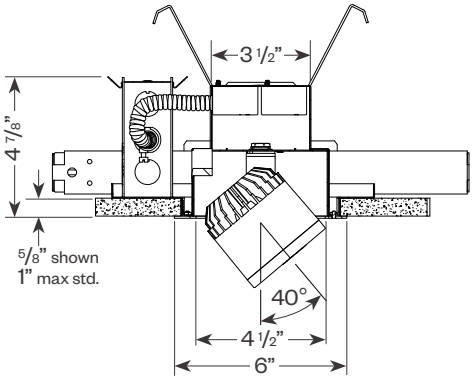

Side View

Standard Driver ***(ELV/TRIAC)***

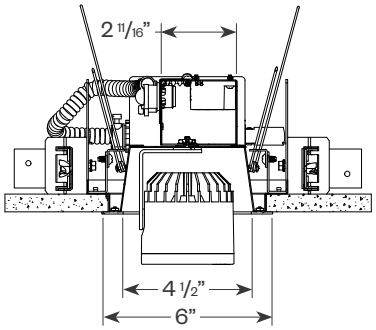

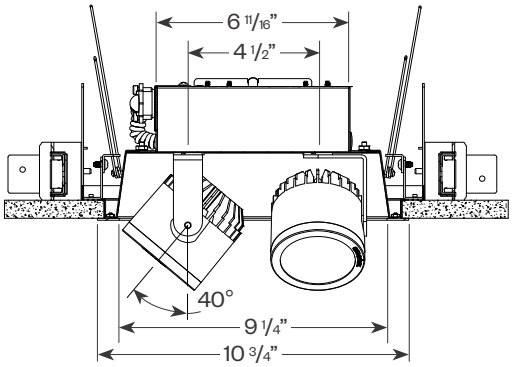

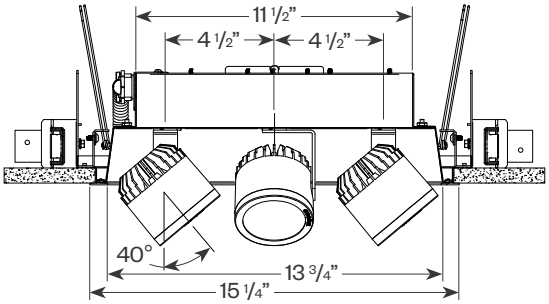

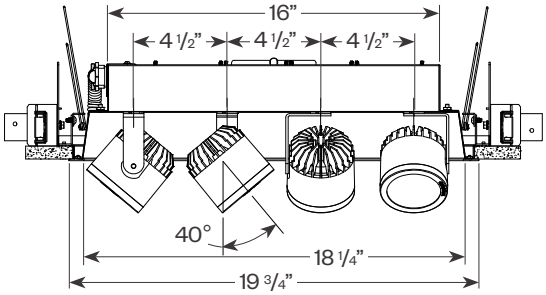

Cylindrix® III Mini

Semi-Recessed Multiples

PROJECT: **TYPE:**

Product Details - Semi-Recessed Trimmed with Hi-lume®/0-10V/DALI Driver

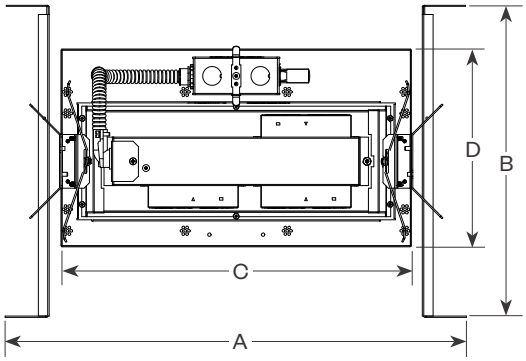

	1 Light	2 Light	3 Light	4 Light
A	12 1/8"	17"	21 1/2"	26"
B	14 1/2" max 25"	14 1/2" max 25"	14 1/2" max 25"	14 1/2" max 25"
C	7 1/16"	11 13/16"	16 5/16"	20 13/16"
D	9 1/8"	9 1/8"	9 1/8"	9 1/8"

Ceiling Cut Out: 1 Light - 5 9/16" x 5 9/16"
2 Light - 5 9/16" x 10 5/16"
3 Light - 5 9/16" x 14 13/16"
4 Light - 5 9/16" x 19 5/16"

End View

Hi-lume®/0-10V/DALI Driver

1 Light

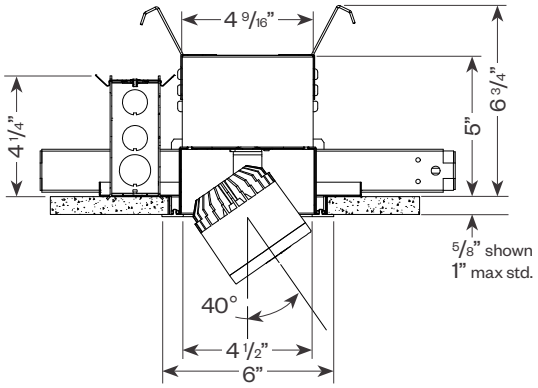

2-4 Light

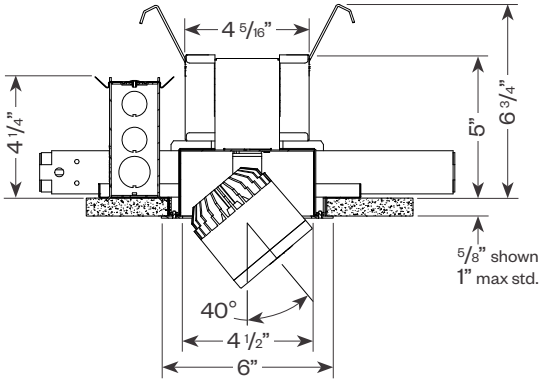

Side View

Hi-lume®/0-10V/DALI Driver

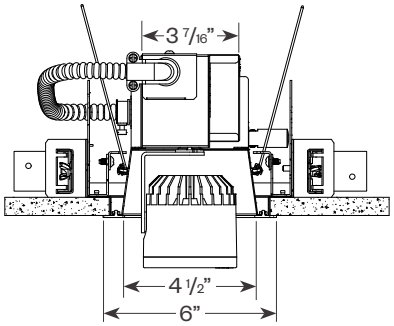

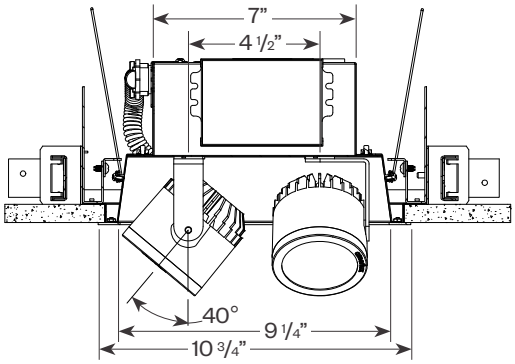

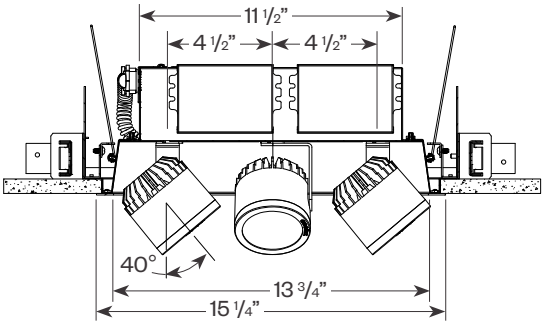

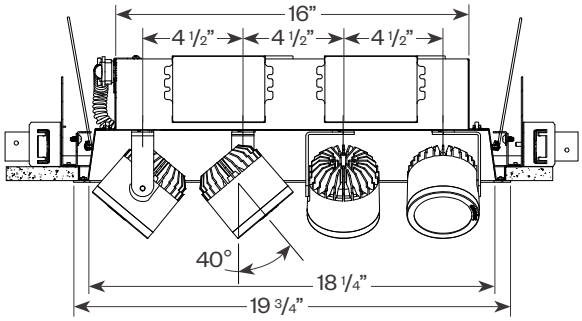

Cylindrix® III Mini

Semi-Recessed Multiples

PROJECT:	TYPE:

Product Details - Semi-Recessed Trimmed with ELV/TRIAC Driver *(see trimless detail on page 4)*

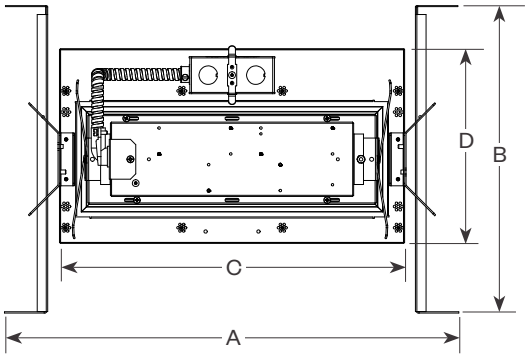

	1 Light	2 Light	3 Light	4 Light
A	12 1/8"	17"	21 1/2"	26"
B	14 1/2" max 25"	14 1/2" max 25"	14 1/2" max 25"	14 1/2" max 25"
C	7 1/16"	11 13/16"	16 5/16"	20 13/16"
D	9 1/8"	9 1/8"	9 1/8"	9 1/8"

Ceiling Cut Out: 1 Light - 5 9/16" x 5 9/16"
2 Light - 5 9/16" x 10 5/16"
3 Light - 5 9/16" x 14 13/16"
4 Light - 5 9/16" x 19 5/16"

End View

Standard Driver *(ELV/TRIAC)*

1 Light

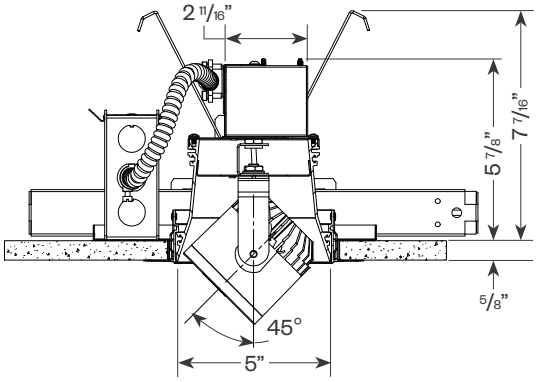

2-4 Light

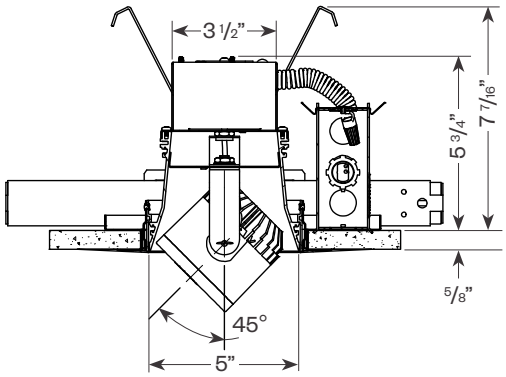

Side View

Standard Driver *(ELV/TRIAC)*

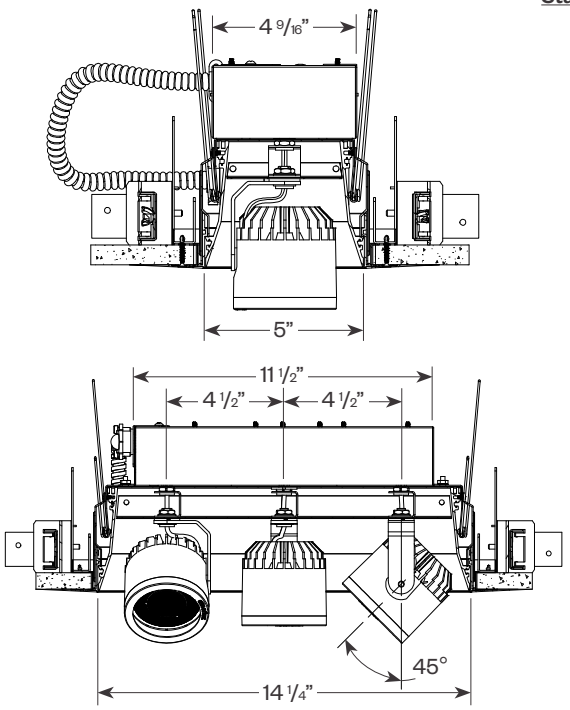

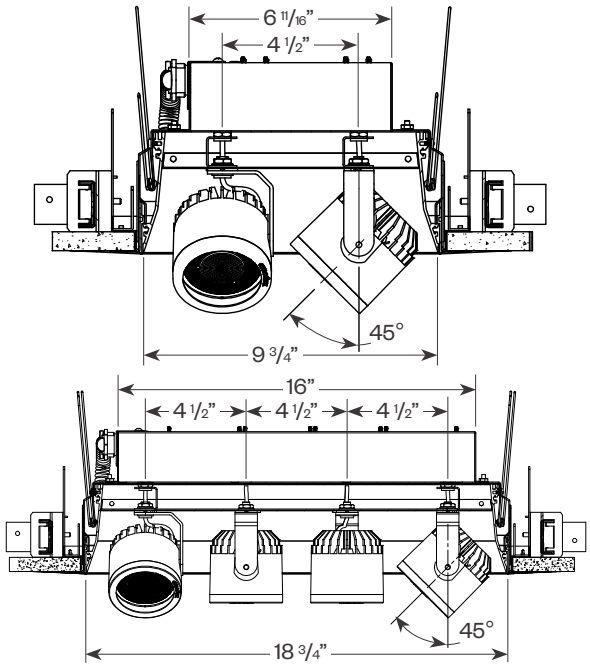

Cylindrix® III Mini

Semi-Recessed Multiples

PROJECT:	TYPE:

Product Details - Semi-Recessed Trimmed with Hi-lume®/0-10V/DALI Driver *(see trimless detail on page 4)*

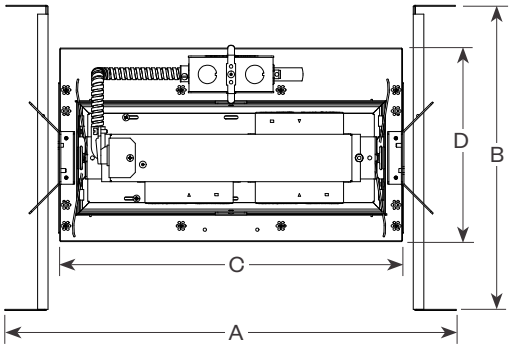

	1 Light	2 Light	3 Light	4 Light
A	12 1/8"	17"	21 1/2"	26"
B	14 1/2" max 25"	14 1/2" max 25"	14 1/2" max 25"	14 1/2" max 25"
C	7 1/16"	11 13/16"	16 5/16"	20 13/16"
D	9 1/8"	9 1/8"	9 1/8"	9 1/8"

Ceiling Cut Out: 1 Light - 5 9/16" x 5 9/16"
2 Light - 5 9/16" x 10 5/16"
3 Light - 5 9/16" x 14 13/16"
4 Light - 5 9/16" x 19 5/16"

End View

Hi-lume®/0-10V/DALI Driver

1 Light

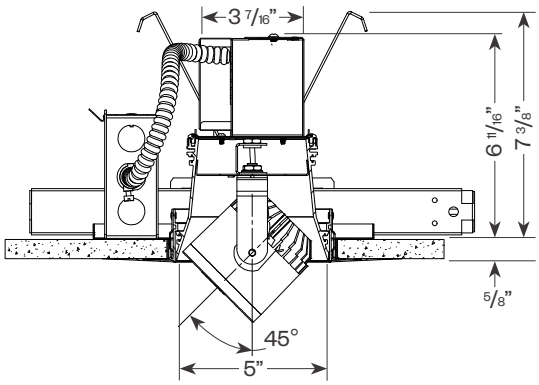

2-4 Light

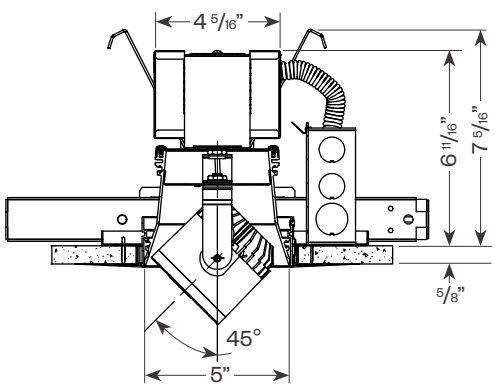

Side View

Hi-lume®/0-10V/DALI Driver

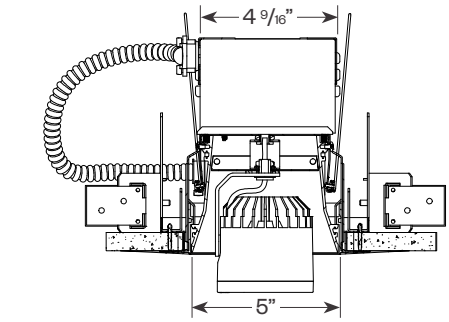

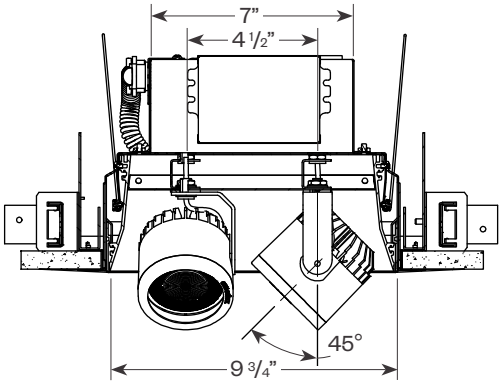

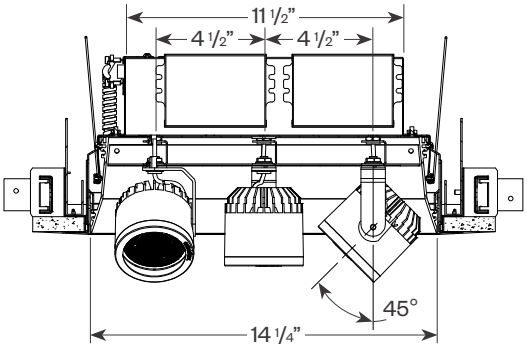

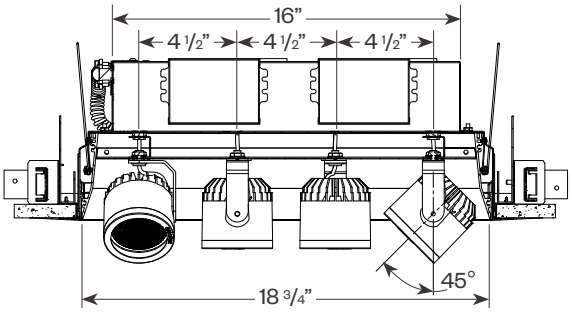

Cylindrix® III Mini

Semi-Recessed Multiples

PROJECT: **TYPE:**

Product Details - Emergency Battery Pack *(2-4 light only)*

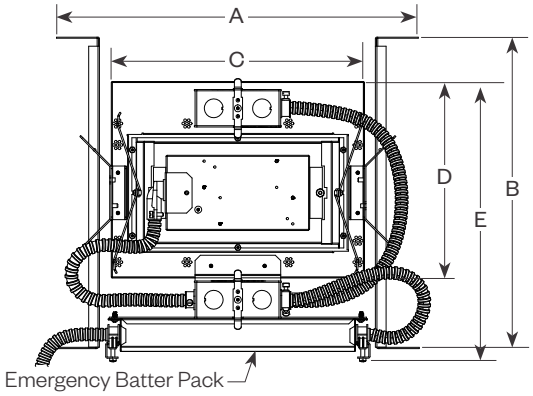

	2 Light	3 Light	4 Light
A	17”	21 1/2”	26”
B	14 1/2” max 25”	14 1/2” max 25”	14 1/2” max 25”
C	11 13/16”	16 5/16”	20 13/16”
D	9 1/8”	9 1/8”	9 1/8”
E	13”	13”	13”

Ceiling Cut Out: 2 Light - 5 9/16” x 10 5/16”
3 Light - 5 9/16” x 14 13/16”
4 Light - 5 9/16” x 19 5/16”

End View

Trimmed

Standard Driver (ELV/TRIAC)
2-4 Light

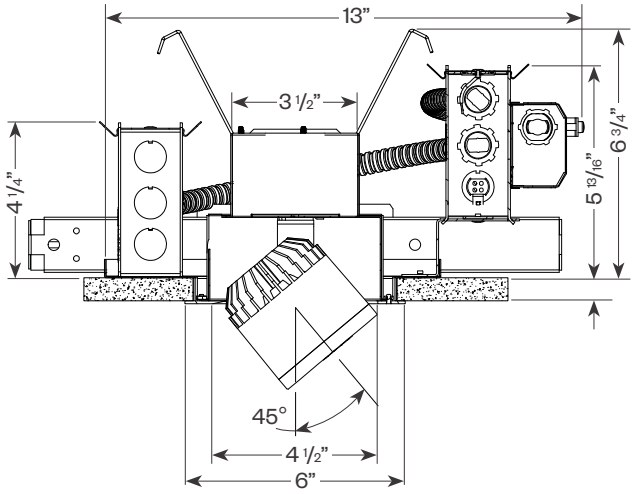

Hi-lume®/0-10V/DALI Driver
2-4 Light

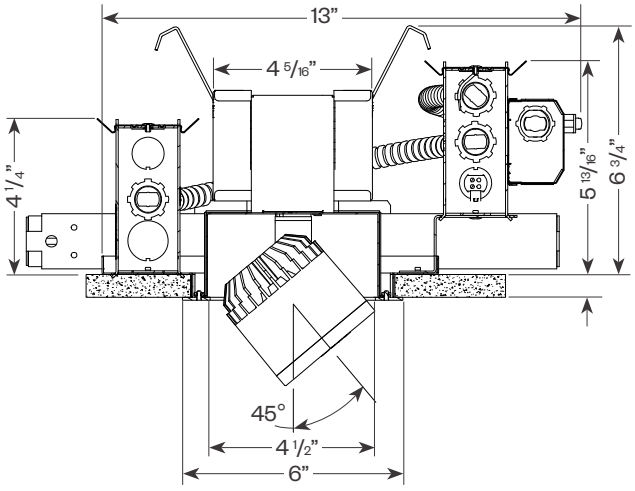

Trimless

Standard Driver (ELV/TRIAC)
2-4 Light

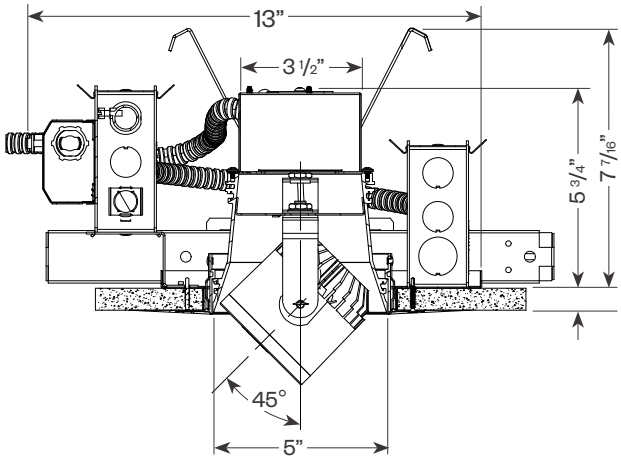

Hi-lume®/0-10V/DALI Driver
2-4 Light

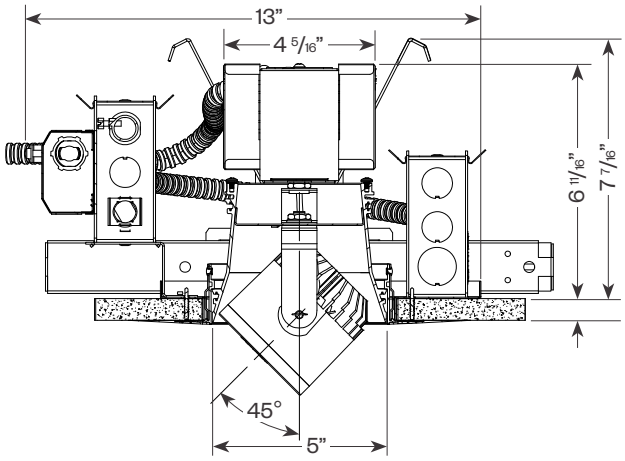

Cylindrix® III Mini

Semi-Recessed Multiples

amerlux

PROJECT:	TYPE:

Performance Data *(per head)*

Multiplying Factors: *(Multiplying Factor is based on 3000K-83 120V IES file on website)*

CCT:	2700K-83	3000K-83	3500K-83	4000K-83
Factor:	0.96	1.0	1.02	1.04

Wattage:	15W	21W
Factor:	0.71	1.0

Note: For 18W (VNSP only) data see pg 11.

CCT:	2200K-90+	2700K-90+	3000K-90+	3500K-90+	4000K-90+	3CLA	SA27	SA30	SW30	SC30
Factor:	0.66	0.83	0.86	0.90	0.93	0.725	0.980	1.003	1.074	0.999

21W LED, 3000K-83

Note: For FL & WF data see pg 11.

Spot (SP), 14°
LTL # 13609366.15
Lumens: 1,898

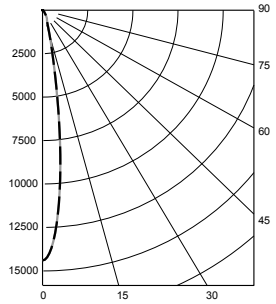

Candelas at Nadir

Deg	Candela
0	14400
5	10490
15	1426
25	560
35	233
45	110

Very Narrow Flood (VNF), 18°
LTL # 13609366.16
Lumens: 2,125

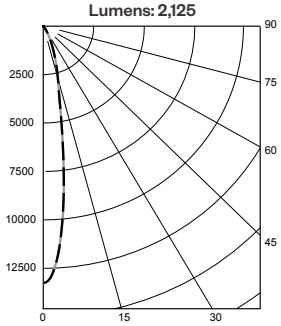

Candelas at Nadir

Deg	Candela
0	13260
5	10300
15	2656
25	810
35	136
45	33

Narrow Flood (NF), 23°
LTL # 13609366.17
Lumens: 1,988

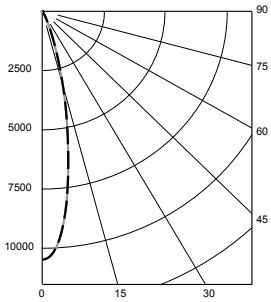

Candelas at Nadir

Deg	Candela
0	10480
5	9150
15	2963
25	453
35	86
45	47

Application Data *(per head)*

Notes and Definitions:
Beam spread is to 50% center beam candlepower *(CBCP)*.
D=Distance to floor or wall.
FC=Footcandles on floor or wall at center beam aiming location.
L=Effective Visual Beam length in feet *(50% of maximum footcandle level)*.
W=Effective Visual Beam width in feet *(50% of maximum footcandle level)*.
CB=Distance across or down to center beam location.

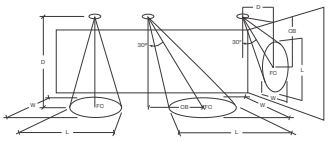

0° Aiming Angle Horizontal Footcandles

	D	FC	L	W
SPOT	5.0'	575	1.2	1.2
	7.5'	256	1.9	1.9
	10.0'	144	2.7	2.7
	12.5'	93	3.2	3.2
VERY NARROW FLOOD	5.0'	531	1.4	1.4
	7.5'	236	2.2	2.2
	10.0'	133	3.0	3.0
	12.5'	85	3.6	3.6
NARROW FLOOD	5.0'	420	1.8	1.8
	7.5'	187	2.9	2.9
	10.0'	105	3.7	3.7
	12.5'	67	4.7	4.7

30° Aiming Angle Horizontal Footcandles

	D	FC	L	W	CB
SPOT	5.0'	371	1.6	1.4	3.0
	7.5'	166	2.5	2.2	4.0
	10.0'	92	3.4	3.0	6.0
	12.5'	61	4.1	3.6	7.0
VERY NARROW FLOOD	5.0'	342	1.9	1.5	3.0
	7.5'	155	2.9	2.6	4.0
	10.0'	85	3.9	3.4	6.0
	12.5'	57	4.7	4.1	7.0
NARROW FLOOD	5.0'	271	2.5	2.2	3.0
	7.5'	126	3.5	3.2	4.0
	10.0'	71	4.8	4.2	5.0
	12.5'	45	6.0	5.4	7.0

30° Aiming Angle Vertical Footcandles

	D	FC	L	W	CB
SPOT	3.0'	216	2.8	1.4	5.0
	4.0'	130	3.5	1.8	6.0
	5.0'	82	4.3	2.5	8.0
	6.0'	58	5.2	2.9	9.0
VERY NARROW FLOOD	3.0'	200	3.4	1.6	5.0
	4.0'	124	4.1	2.1	6.0
	5.0'	77	5.2	2.9	7.0
	6.0'	56	6.2	3.2	9.0
NARROW FLOOD	3.0'	193	3.2	1.8	4.0
	4.0'	105	4.5	2.8	6.0
	5.0'	70	5.4	3.3	7.0
	6.0'	49	6.6	3.9	8.0

60° Aiming Angle Vertical Footcandles

	D	FC	L	W	CB
SPOT	3.0'	779	1.3	1.1	2.0
	4.0'	555	1.5	1.2	2.0
	5.0'	361	1.8	1.4	3.0
	6.0'	247	2.2	1.6	3.0
VERY NARROW FLOOD	3.0'	745	1.5	1.2	2.0
	4.0'	529	1.7	1.3	2.0
	5.0'	333	2.1	1.6	3.0
	6.0'	235	2.4	1.9	3.0
NARROW FLOOD	3.0'	628	1.9	1.3	2.0
	4.0'	443	1.9	1.6	2.0
	5.0'	265	2.6	2.2	3.0
	6.0'	197	2.9	2.6	3.0

Cylindrix® III Mini

Semi-Recessed Multiples

amerlux

PROJECT: **TYPE:**

Performance Data *(per head, continued)*

Multiplying Factors: *(Multiplying Factor is based on 3000K-83 120V IES file on website)*

CCT:	2700K-83	3000K-83	3500K-83	4000K-83
Factor:	0.96	1.0	1.02	1.04

Wattage:	15W	21W
Factor:	0.71	1.0

CCT:	2200K-90+*	2700K-90+	3000K-90+	3500K-90+	4000K-90+	3CLA	SA27	SA30	SW30	SC30
Factor:	0.66	0.83	0.86	0.90	0.93	0.725	0.980	1.003	1.074	0.999

** Not available for use with 18W.*

21W LED, 3000K-83

Note: For SP, VNF, NF data see pg 10.

Flood (FL), 34°
LTL # 13609366.18
Lumens: 1,960

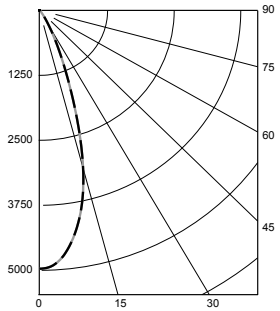

Candelas at Nadir

Deg	Candela
0	4970
5	4780
15	3130
25	913
35	193
45	55

Wide Flood (WF), 44°
LTL # 13609366.19
Lumens: 1,930

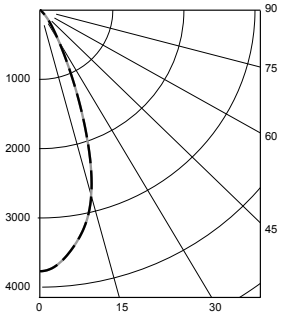

Candelas at Nadir

Deg	Candela
0	3771
5	3624
15	2758
25	1034
35	308
45	101

18W LED, 3000K *(VNSP only)*

Very Narrow Spot (VNSP), 8°
LTL #1170140
Lumens: 1,096

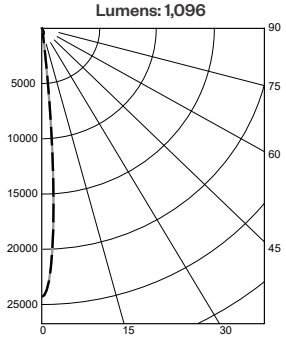

Candelas at Nadir

Deg	Candela
0	24308
5	8980
15	527
25	394
35	131
45	57

Application Data *(per head, continued)*

Notes and Definitions:
Beam spread is to 50% center beam candlepower *(CBCP)*.
D=Distance to floor or wall.
FC=Footcandles on floor or wall at center beam aiming location.
L=Effective Visual Beam length in feet *(50% of maximum footcandle level)*.
W=Effective Visual Beam width in feet *(50% of maximum footcandle level)*.
CB=Distance across or down to center beam location.

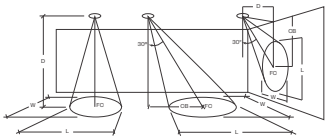

0° Aiming Angle Horizontal Footcandles

	D	FC	L	W
FLOOD	5.0'	199	3.0	3.0
	7.5'	89	4.4	4.4
	10.0'	50	5.8	5.8
	12.5'	32	7.3	7.3
WIDE FLOOD	5.0'	151	3.2	3.2
	7.5'	67	5.0	5.0
	10.0'	38	6.6	6.6
	12.5'	25	8.3	8.3
18W only VERY NARROW SPOT	5.0'	967	1.0	1.0
	7.5'	431	1.1	1.1
	10.0'	243	1.3	1.3
	12.5'	156	1.8	1.8

30° Aiming Angle Horizontal Footcandles

	D	FC	L	W	CB
FLOOD	5.0'	141	3.5	3.1	2.0
	7.5'	63	5.2	4.8	3.0
	10.0'	36	6.9	6.4	4.0
	12.5'	23	8.6	8.0	6.0
WIDE FLOOD	5.0'	110	3.8	3.5	2.0
	7.5'	49	5.6	5.4	3.0
	10.0'	28	7.5	7.3	4.0
	12.5'	18	9.5	9.1	5.0
18W only VERY NARROW SPOT	5.0'	624	1.0	1.0	3.0
	7.5'	251	1.8	1.1	4.0
	10.0'	153	2.1	1.6	6.0
	12.5'	102	2.4	2.2	7.0

30° Aiming Angle Vertical Footcandles

	D	FC	L	W	CB
FLOOD	3.0'	124	3.3	2.7	3.0
	4.0'	70	4.5	3.4	4.0
	5.0'	45	5.6	4.4	5.0
	6.0'	32	6.8	5.2	7.0
WIDE FLOOD	3.0'	109	3.2	2.7	3.0
	4.0'	62	4.2	3.6	4.0
	5.0'	40	5.3	4.6	5.0
	6.0'	28	6.5	5.5	6.0
18W only VERY NARROW SPOT	3.0'	360	1.5	1.0	5.0
	4.0'	185	2.4	1.1	7.0
	5.0'	129	2.7	1.2	8.0
	6.0'	90	3.3	1.6	10.0

60° Aiming Angle Vertical Footcandles

	D	FC	L	W	CB
FLOOD	3.0'	372	2.2	1.8	1.0
	4.0'	221	2.9	2.7	2.0
	5.0'	143	3.5	3.1	2.0
	6.0'	98	4.2	3.9	3.0
WIDE FLOOD	3.0'	303	2.3	2.0	1.0
	4.0'	167	3.1	3.0	2.0
	5.0'	111	3.8	3.5	2.0
	6.0'	76	4.6	4.5	2.0
18W only VERY NARROW SPOT	3.0'	983	1.0	1.0	2.0
	4.0'	729	1.1	1.0	2.0
	5.0'	600	1.1	1.0	3.0
	6.0'	325	1.9	1.0	3.0

Cylindrix® III Mini

Semi-Recessed Multiples

PROJECT:	TYPE:

Dimming Compatibility

Amerlux® Cylindrix® fixtures are compatible with all major dimming protocols prevalent in the United States. Please see below for general compatibilities and wiring diagrams. Amerlux recommends testing your unique dimming configuration as the exact full configuration *(Dimmer, Fixture Quantity, Voltage, etc)* may affect dimming performance.

--- NOTE: INFORMATION BELOW IS FOR WIRED DIMMERS ONLY. FOR WIRELESS DIMMERS, CONSULT FACTORY ---

TRIAC *(Forward Phase)* Dimming

Utilizes standard TRIAC dimmers that are in wide use in installations across the US. Best for retrofit applications where TRIAC dimmers are installed.

Notes:

- 120VAC or 277VAC*
- Dims down to 5% light output *(most cases)*
- Consult Dimming manufacturer for installation instructions - **DO NOT SHARE NEUTRALS!**
- Must meet dimmer Minimum Load Requirements per dimming manufacturer

Compatible Dimmers†:	
Wall Box *(TRIAC 120VAC)*	**Central System**
Lutron "Diva"	Lutron "GP" Panel
Lutron "Nova-T"	Lutron Grafik Eye QS
Lutron "Maestro"	
Lutron "Skylark"	

TRIAC Wiring Diagram

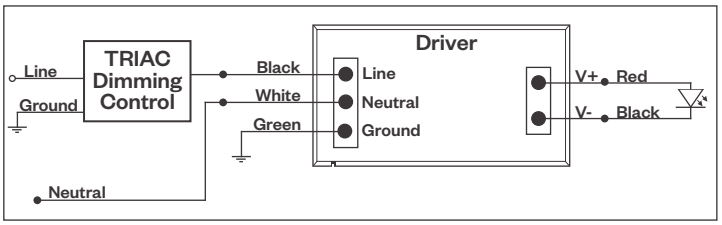

ELV - Electronic Low Voltage *(Reverse Phase)* Dimming

Utilizes specialized "ELV" dimmers.

Notes:

- 120VAC or 277VAC*
- Dims down to 5% light output *(most cases)*
- Consult Dimming manufacturer for installation instructions - **DO NOT SHARE NEUTRALS!**
- Must meet dimmer Minimum Load Requirements per dimming manufacturer

ELV Wiring Diagram

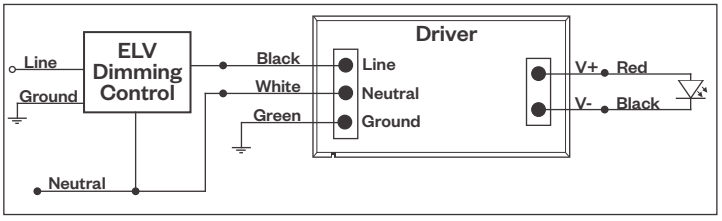

Compatible Dimmers†:		
Wall Box *(ELV 120VAC)*	**Wall Box** *(ELV 277VAC)*	**Central System**
Lutron "Diva"	Leviton Revoir II AWSMT-E	Lutron "GP" Panel with PHPM-PA 120/277VAC
Lutron "Nova-T"		Lutron Grafik Eye QS with PHPM-PA 120/277VAC
Lutron "Maestro"		
Lutron "Skylark"		
Leviton "Surslide"		
Leviton "Vizio"		

Notes:

* Driver is 277VAC dimmable with appropriate dimmer *(by others)*. All provided wiring diagrams show 120VAC wiring colors and method. Please refer to 277VAC dimmer installation instructions for 277VAC wiring diagrams.

† The absence of a dimmer from the lists above does not imply incompatibility. Please consult factory for compatibility inquiries.

Cylindrix® III Mini

Semi-Recessed Multiples

PROJECT:	TYPE:

Dimming Compatibility *(continued)*

Amerlux® Cylindrix® fixtures are compatible with all major dimming protocols prevalent in the United States. Please see below for general compatibilities and wiring diagrams. Amerlux recommends testing your unique dimming configuration as the exact full configuration *(Dimmer, Fixture Quantity, Voltage, etc)* may affect dimming performance.

--- NOTE: INFORMATION BELOW IS FOR WIRED DIMMERS ONLY. FOR WIRELESS DIMMERS, CONSULT FACTORY ---

0-10V Dimming

Integrates into a variety of building management and daylighting controls

Notes:

- 120VAC or 277VAC*
- Dims down to 1% light output
- Requires interface to turn off power to driver
- Consult Dimming manufacturer for installation instructions - **DO NOT SHARE NEUTRALS!**

Compatible Dimmers†:		
Wall Box		**Central System**
Lutron "Diva" - DVSTV	Leviton Renoir II 0-10V	Lutron Grafik Eye with GRX-TVI Interface

0-10V Wiring Diagram

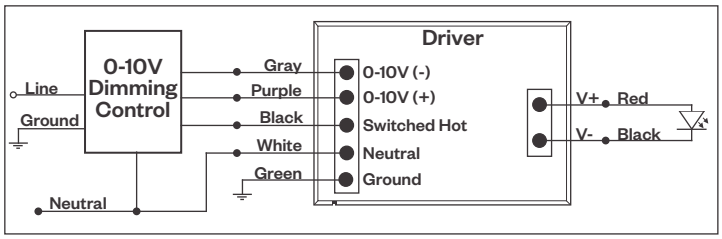

Lutron LDE1 Dimming

Integrates into Lutron EcoSystem building management

Notes:

- 120VAC or 277VAC*
- Dims down to 1% Soft-On/Fade-to-Black
- EcoSystem Control
- Consult Dimming manufacturer for installation instructions - **DO NOT SHARE NEUTRALS!**

Compatible Dimmers†:	
Lutron ECO System	**Central System**
Pow Pak Dimming Modules	Lutron EcoSystem compatible controls
Energi Savr Node	
Grafik Eye QS/Homeworks	
QS Control Unit	
Quantum Hub	
Homeworks QS/My Room	

LDE1 *(HILUME-H-ECO)* EcoSystem Digital Control Wiring Diagram

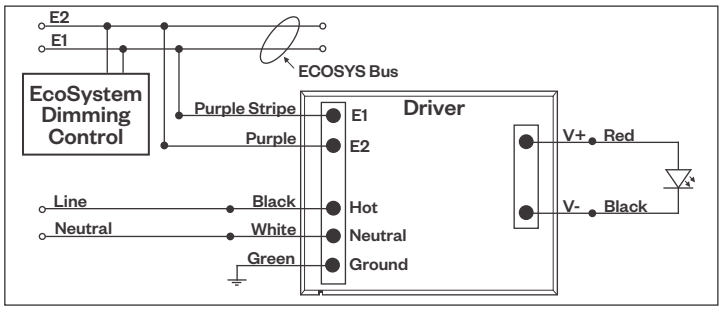

DALI Dimming

Digital control protocol allows individual fixture control

Notes:

- 120VAC - 277VAC*
- Dims down to 1% light output in most cases

Compatible Dimmers†:	
Wall Box *(3-Wire Fluorescent)*	**Central System**
Leviton CD250 Controller	Dynalite
	Fifth Light

DALI Wiring Diagram

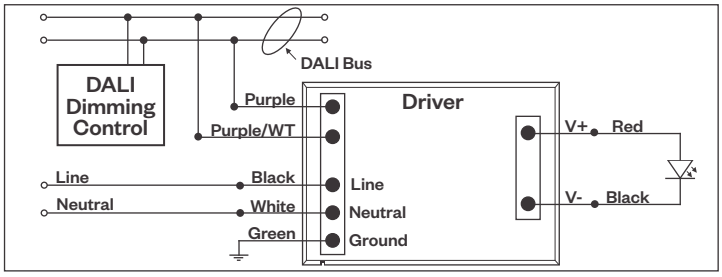

Notes:

* Driver is 277VAC dimmable with appropriate dimmer *(by others)*. All provided wiring diagrams show 120VAC wiring colors and method. Please refer to 277VAC dimmer installation instructions for 277VAC wiring diagrams.

† The absence of a dimmer from the lists above does not imply incompatibility. Please consult factory for compatibility inquiries.

Cylindrix® III Mini

Semi-Recessed Multiples

PROJECT:	TYPE:

Emergency Battery Pack
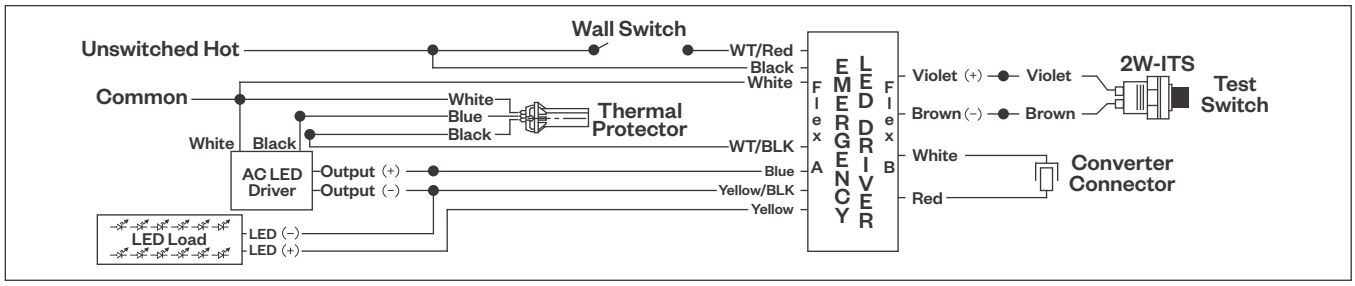
Wiring Diagram